XL PREMIUM

LARGE WALL MOUNTED SPLIT SYSTEM

FTX(K)M-WVMA

Nomenclature

	CURRENT				NEW		
	Class	Indoor	Outdoor	Capacity, kW (Cool/Heat)	Indoor	Outdoor	Capacity, kW (Cool/Heat)
Reverse Cycle	85	FTXM85PAVMA	RXM85PAVMA	8.5/9.0	FTXM85**W**VMA	RXM85**W**VMA	8.5/9.0
	95	FTXM95PAVMA	RXM95PAVMA	9.4/10.3	FTXM95**W**VMA	RXM95**W**VMA	**9.5**/10.3
Cooling Only	85	FTKM85PAVMA	RKM85PAVMA	8.5/-	FTKM85**W**VMA	RKM85**W**VMA	8.5/-
	95	FTKM95PAVMA	RKM95PAVMA	9.4/-	FTKM95**W**VMA	RKM95**W**VMA	**9.5**/-

Appearance & Dimensions

		Indoor Unit	Outdoor Unit	Controller
Reverse Cycle	85	329(H) x 1240(W) x 278(D) mm	990(H) x 940(W) x 320(D) mm	188.7(H) x 58.5(W) x 23.4(D) mm
	95			
Cooling Only	85			
	95			

Product Overview

- New XL Premium supersedes FTXM85-95PAVMA, available in RC & CO
  - RC: FTXM-**W**VMA: 8.5 – 9.5kW (2 new models)
  - CO: FTKM-**W**VMA: 8.5 – 9.5kW (2 new models)
  - Consistent appearance with Alira X split range

- Improved energy efficiency
  - Up 26% in TCSPF & 1 Star (85 Class, Avg Zone)

FEATURES

- 3 Layers of Filtration → catching and decomposing odours & bacteria
  1. Pre-Filter
  2. Enzyme Blue Deodorising Filter
  3. Streamer Technology
- Mould Proof Operation → prevents growth of mould on internal components
- Built-in Humidity Sensor for improved dry operation (↑40% dehumidification)
- Redesigned Dual Flaps → longer throws up to 10m
- Built-in Wi-Fi (Mobile Controller)
- Indoor unit quiet operation (35 dBA, 85 Class)
- Trademark Intelligent Eye infrared human presence sensor

What's New

		FTXM85PAVMA	FTXM85WVMA
Design		340(H) x 1200(W) x 259(D) mm	**Redesigned Casing** **329(H) x 1240(W) x 278(D) mm**
Efficiency	Hot (Cool/Heat)	2.5/2.5★	**3.5**/2.5★
	Average (Cool/Heat)	2.0/2.5★	**3.0/2.0★**
	Cold (Cool/Heat)	2.0/2.0★	**3.5**/2.0★
IAQ	Prefilter	✓	✓
	Enzyme Blue Filter	✓	✓
	Streamer Technology	N/A	✓
	Mould Proof Operation	N/A	✓
	Program Dry Function	✓	**Improved** with built-in Humidity Sensor
Convenience	Built-in S21 Port	Built-in	**Built-in** (KER087A41 harness required)
	Wi-Fi (Mobile Controller)	Optional (BRP072C42)	**Built-in**
Technology	Discharge Flap	Dual Flap	**Dual Flap** with Aerodynamic End Vanes
	Sound Performance	37dBA in SL Mode	**35**dBA in SL Mode
	Intelligent Eye	✓	✓

What is ZERL?

- In typical Australian climates, the AC will operate at part load capacity for most of the year, Seasonal Performance provides a more realistic view of AC energy efficiency than the current AEER ratings which assume a set temp. & full load conditions all year round
- The Zoned Energy Rating Label (ZERL) displays the seasonal performance (Star Rating) for three distinct climate zones as well as capacity output & sound power levels

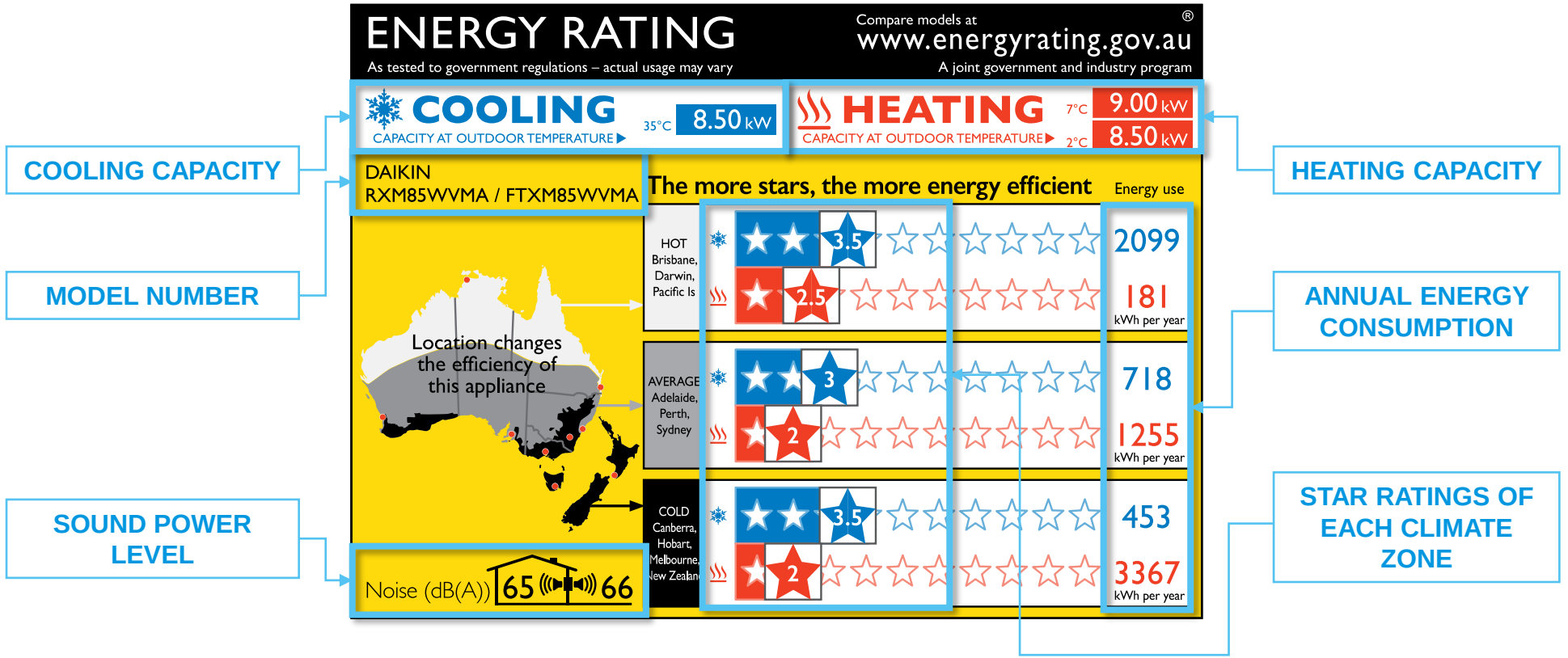

Seasonal Energy Performance – Reverse Cycle

Seasonal Energy Performance – Cooling Only

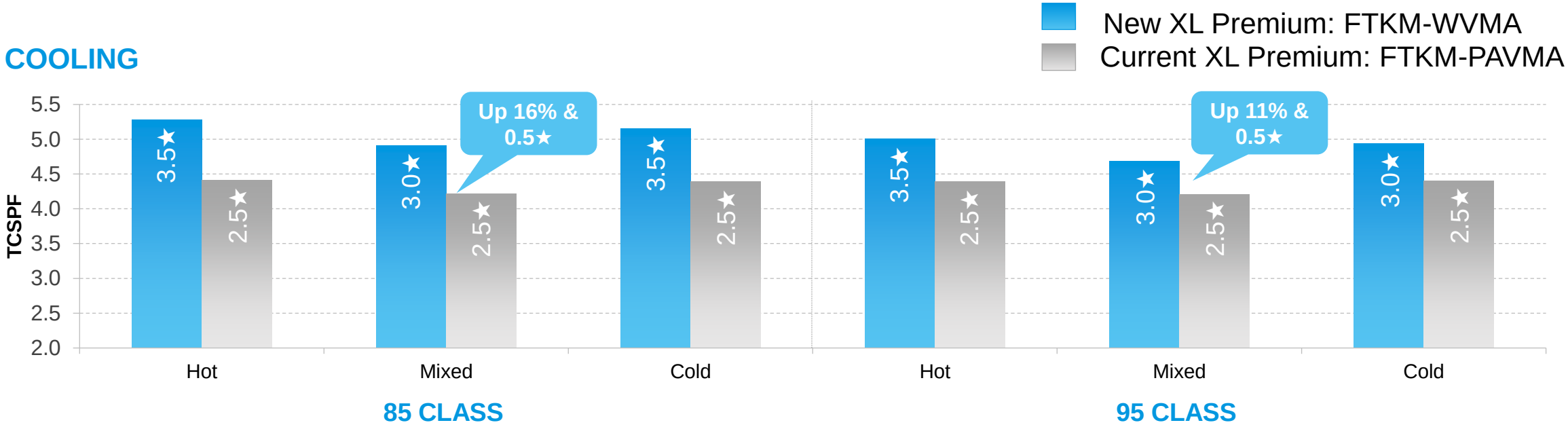

OPERATION

Wireless Controller Design

FEATURES

- Contemporary look
- Backlit LCD Controller
- Large buttons, clearly labeled for ease of use
- Key functions on face of controller
- 0.5 ˚C increment temperature control
- Weekly Timer

Wireless Controller Tour

CONTROLLER INTERFACE

- Key functions are easily accessible for quick configuration

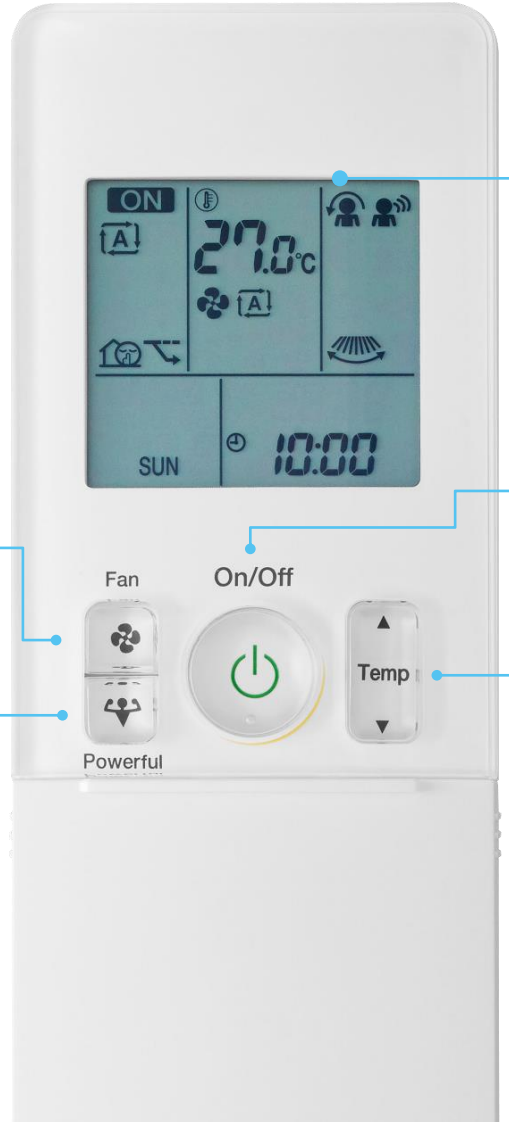

Selects fan speed and Indoor Unit Quiet Operation

Inverter Powerful Operation

On/Off switch

Sets room temperature

Wireless Controller Tour

INVERTER POWERFUL OPERATION

- Operates on all modes (Auto, Heat, Cool, Dry, Fan)
- Airflow is boosted beyond high fan speed for 20min before returning to its initial setting
- Target Setpoint temp. is also adjusted (see table)

Mode	Fan Speed	Target SP
COOL	H + 80rpm	18°C
DRY	Dry Speed + 80rpm	Initial SP – 2.5°C
HEAT	H + 80rpm	31°C
FAN	H + 80rpm	-

Note: In AUTO, Fan Speed & Target SP is as per COOL/HEAT

Wireless Controller Tour

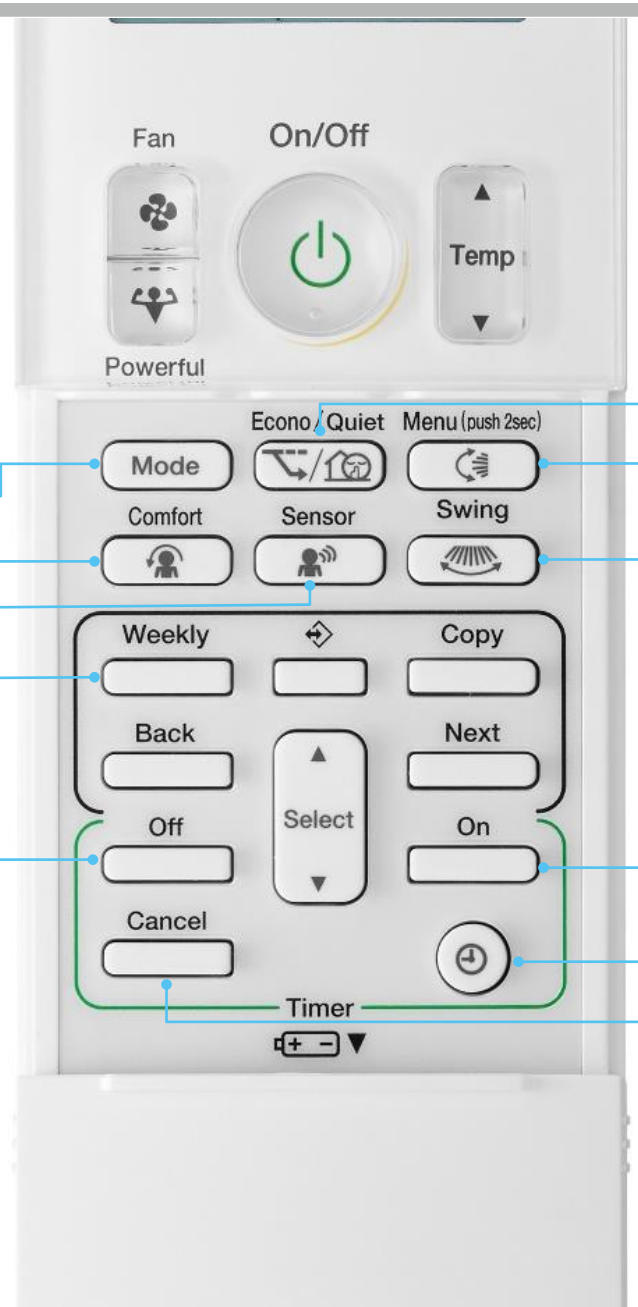

Selects mode: automatic, dry, cooling, heating, fan only operation

Comfort Airflow

Intelligent Eye

Weekly Timer setting

24-Hour Off Timer

Econo Mode/Outdoor Unit Quiet Operation

Streamer/Mould Proof & Vertical Auto-Swing (up and down)

Horizontal Auto-Swing (left and right)

24-Hour On Timer

Sets clock

Cancels On/Off Timer

Wireless Controller Tour

MODE OPERATIONS

- Toggle mode button to switch between available modes

Modes	AUTO	DRY	COOL	HEAT	FAN
Icon					
Temperature Settings	18 – 30°C	N/A	18 – 32°C	10 – 30°C	N/A

Button Press Cycle

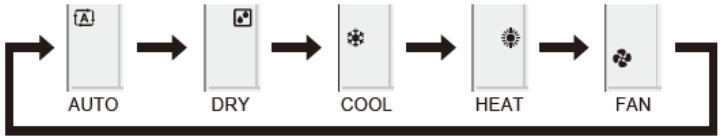

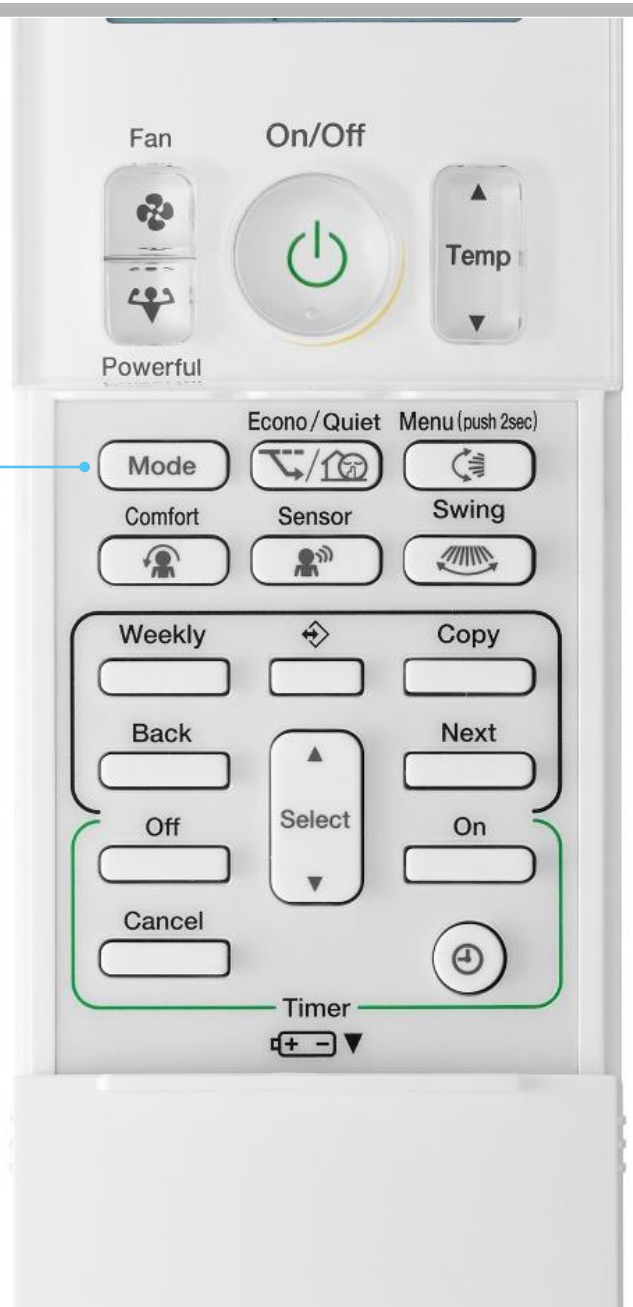

Wireless Controller Tour

COMFORT AIRFLOW OPERATION

- Air is streamed upwards in cooling and downwards in heating
- Improves air distribution
- Provides a comfortable air distribution that is directed away from occupants for draught free comfort

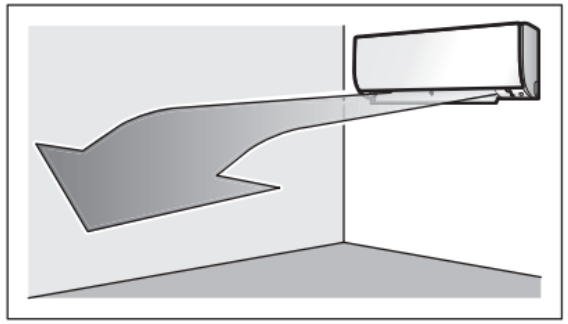

COOL operation

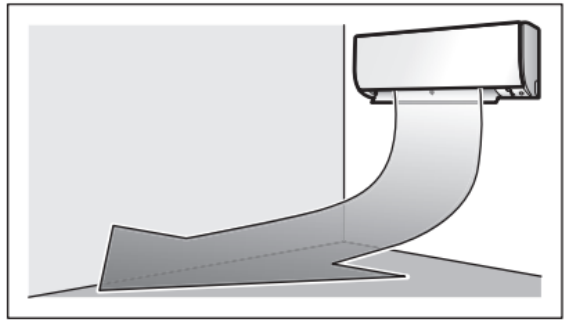

HEAT operation

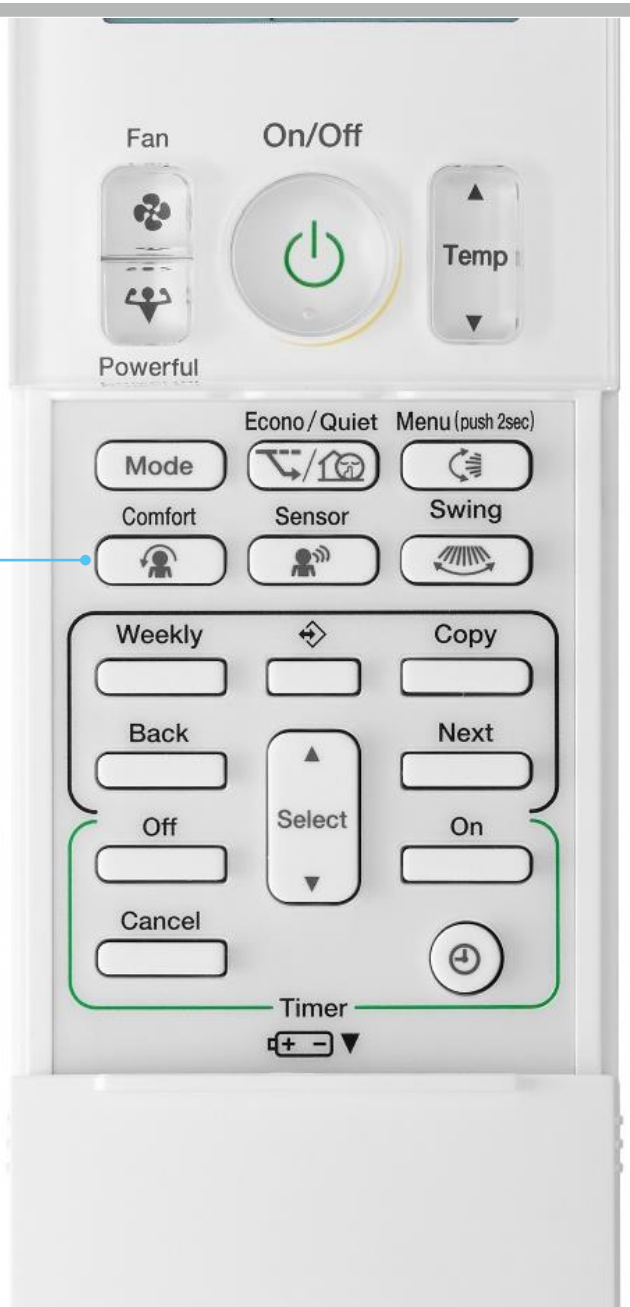

Wireless Controller Tour

ECONO MODE

- Prevents tripping of circuit breaker by limiting start up power consumption
- Useful when there are multiple household appliances in operation
- Not available during ‘Inverter Powerful Operation’

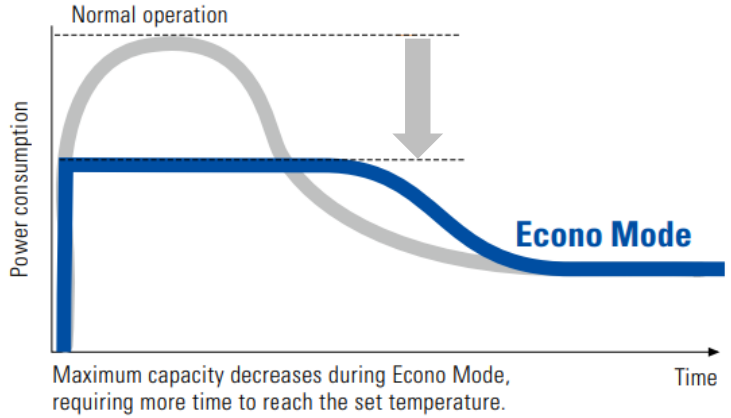

Button Press Cycle

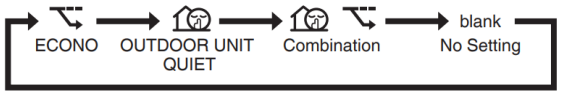

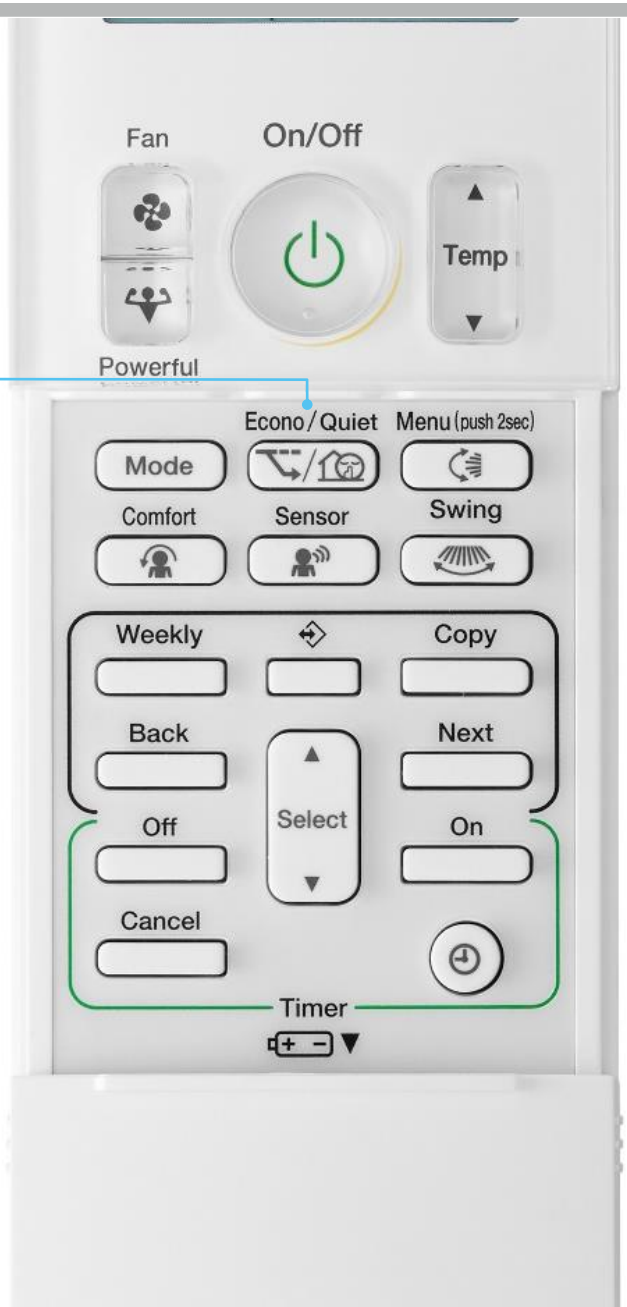

Wireless Controller Tour

INDOOR QUIET MODE

- Sound pressure level can be reduced **by up to 4dBA** from Low Fan Speed depending on the model

85 Class Example (Cooling)

Fan speeds	dB(A)
H	49
M	44
L	38
SL	35

3dBA

Button Press Cycle

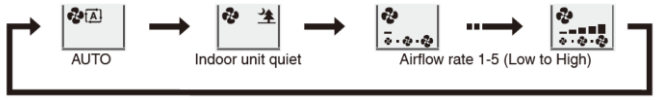

OUTDOOR QUIET MODE

- Sound pressure level can be reduced **by up to 3dBA** from High Fan Speed depending on the model

85 Class Example (Cooling)

Fan speeds	dB(A)
H	54
SL	51

3dBA

Button Press Cycle

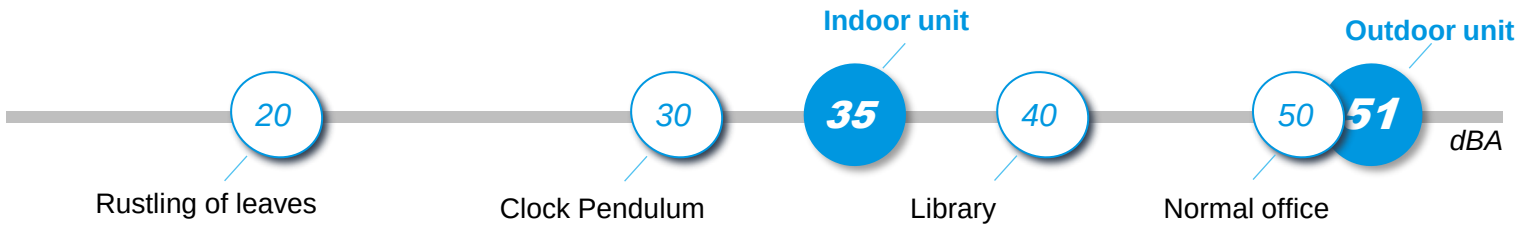

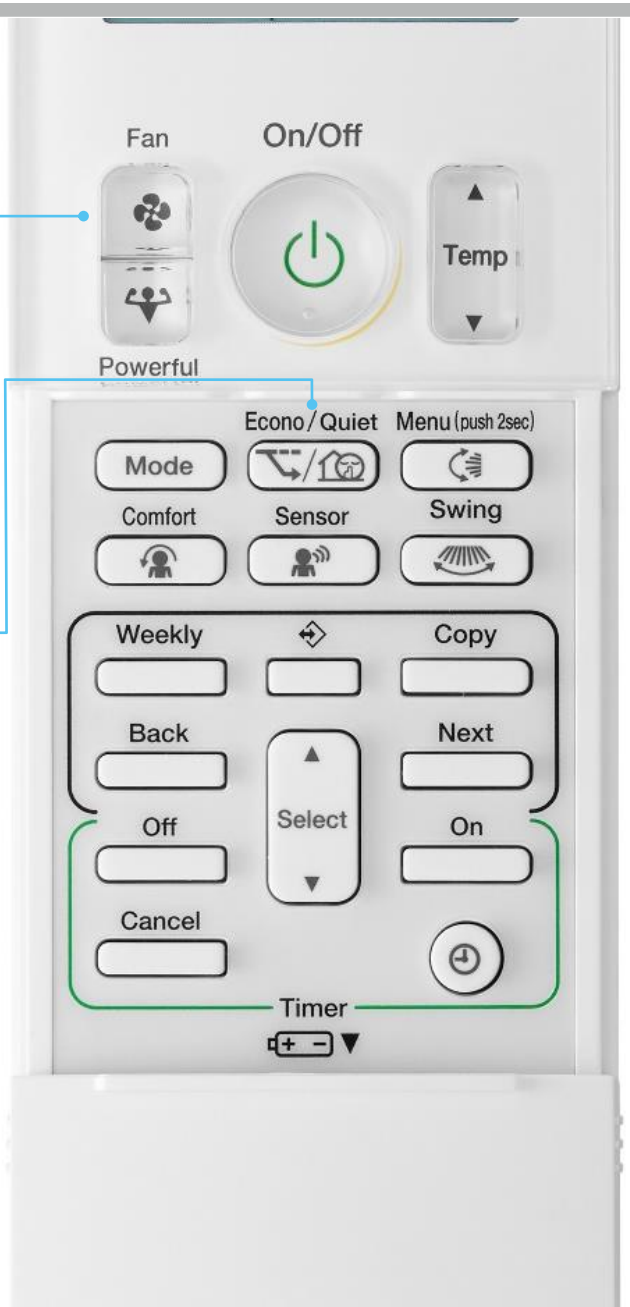

Wireless Controller Tour

INTELLIGENT EYE SENSOR

- Intelligent Eye operation is designed to
  - Automatically adjust to energy saving operations when no occupant is detected
  - Return to normal operation when occupant is detected
- Human presence sensing max parameters – vertical: 90°, horizontal: 110° & range: 7m

Button Press Cycle

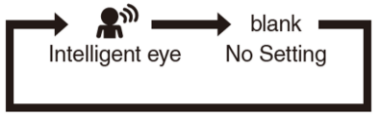

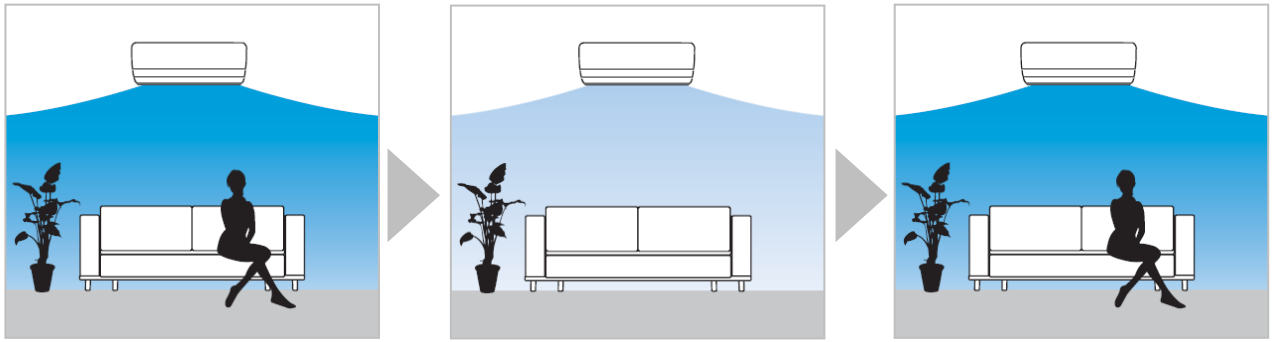

If occupants detected, the air conditioner maintains the set temperature.

If no movement detected for 20 minutes, the unit will adjust the set temperature by ±2°C.

If occupants detected, the air conditioner returns to the original set temperature level.

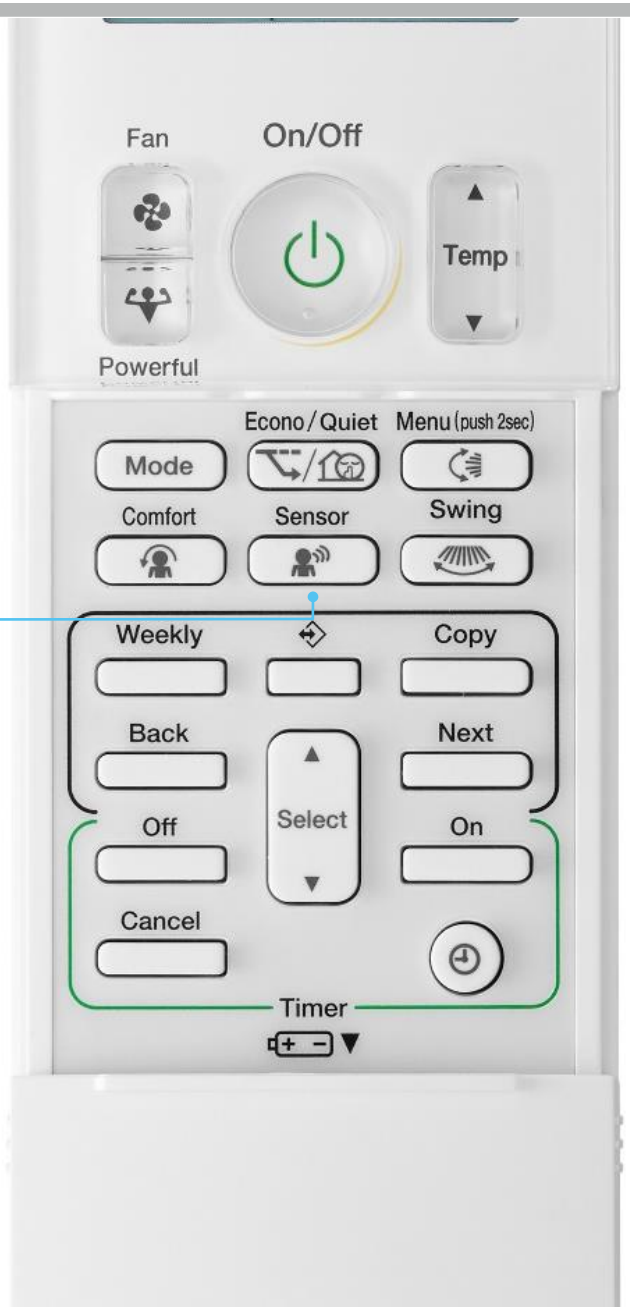

Wireless Controller Tour

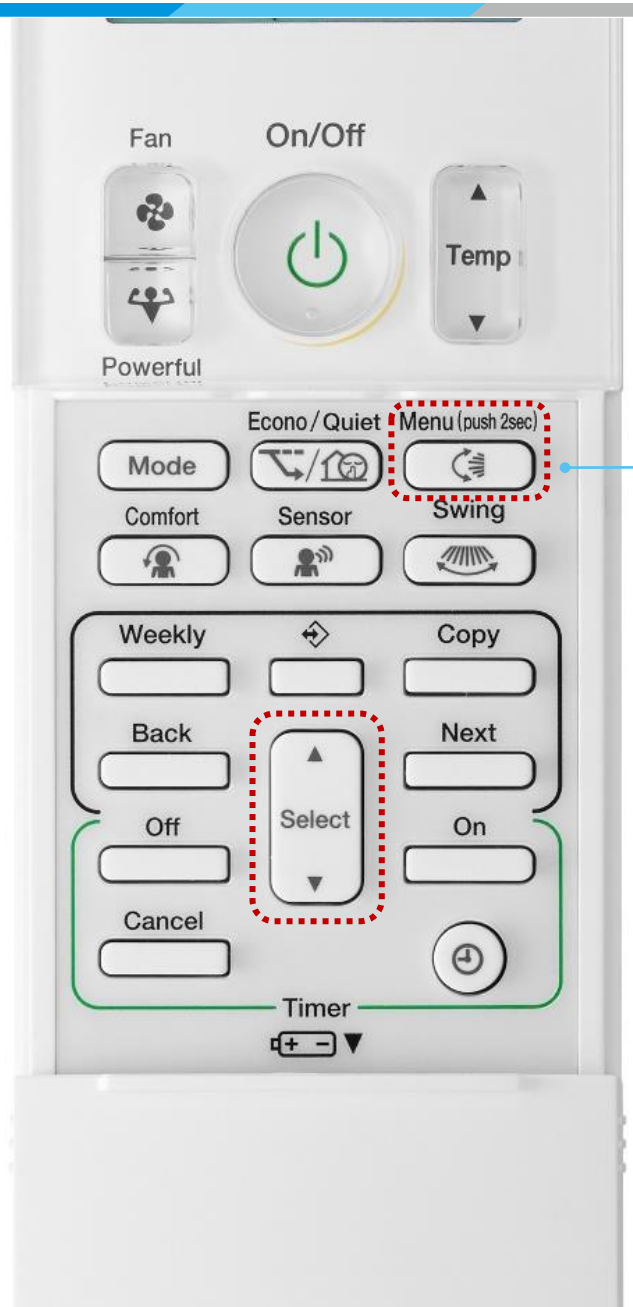

STREAMER OPERATION

- Releases high speed electrons that collide with oxygen & nitrogen molecules, thus activating them and enabling oxidative decomposition
- Removes odours, bacteria and indoor air pollutants such as formaldehyde

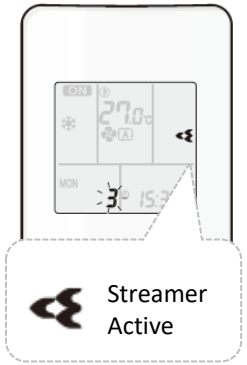

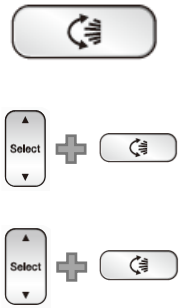

Hold **MENU** button for 2 seconds to enter Menu

Use **SELECT** button arrows to choose menu number 3, press **MENU** button to confirm

Use **SELECT** button arrows to select ON or OFF, press **MENU** button to confirm

While Streamer Operation is Enabled

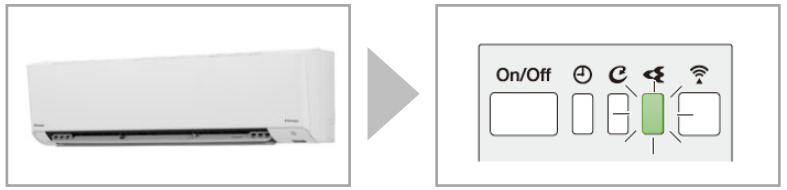

Streamer will only operate while the unit is in operation

While enabled, streamer LED will light up

STREAMER

Wireless Controller Tour

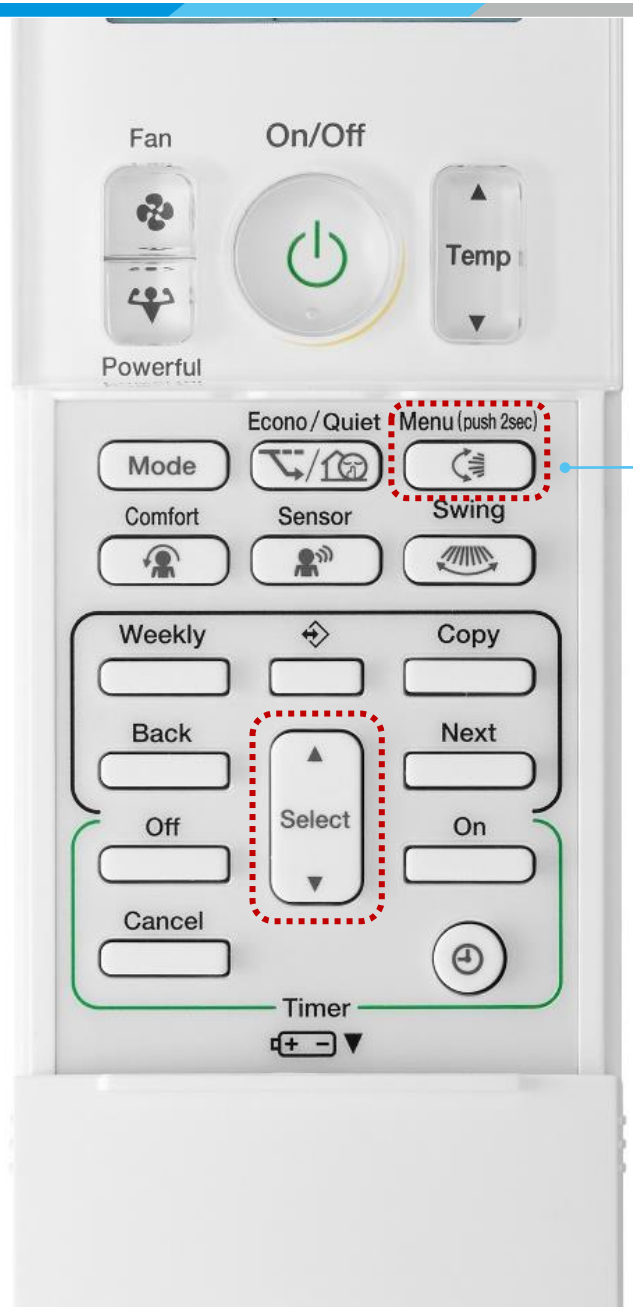

MOULD PROOF OPERATION

- Activates at the end of Cooling or Drying operation
- Dries and sterilises the unit for 1 hour before powering off
- Streamer prevents build-up of mould & odour on internal components

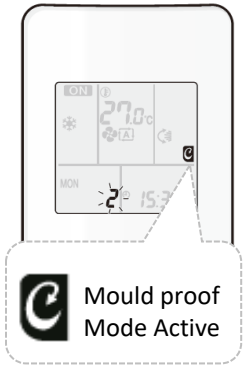

Hold **MENU** button for 2 seconds to enter Menu

Use **SELECT** button arrows to choose menu number 2, press **MENU** button to confirm

Use **SELECT** button arrows to select ON or OFF, press **MENU** button to confirm

While Mould Proof Operation is Enabled

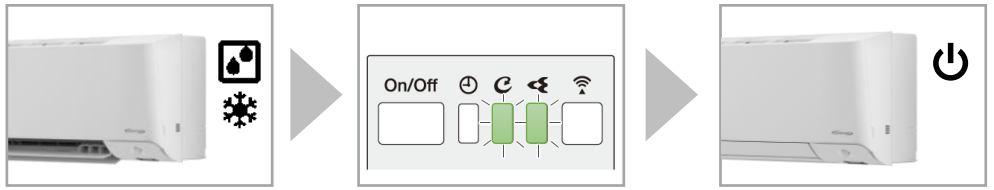

After DRY/COOL operation is stopped by Remote Controller*	Mould Proof Operation activates, indicated by the LED status panel	After 1 hour^ the unit will power off Automatically

*Mould Proof Operation does not activate when the unit is turned off using Mobile Controller App, OFF TIMER or when COOL/DRY operation is short
^To exit Mould Proof Operation early, double press On/Off button
Note: the flaps may sometimes close to increase the drying effect inside the air conditioner

Wireless Controller Tour

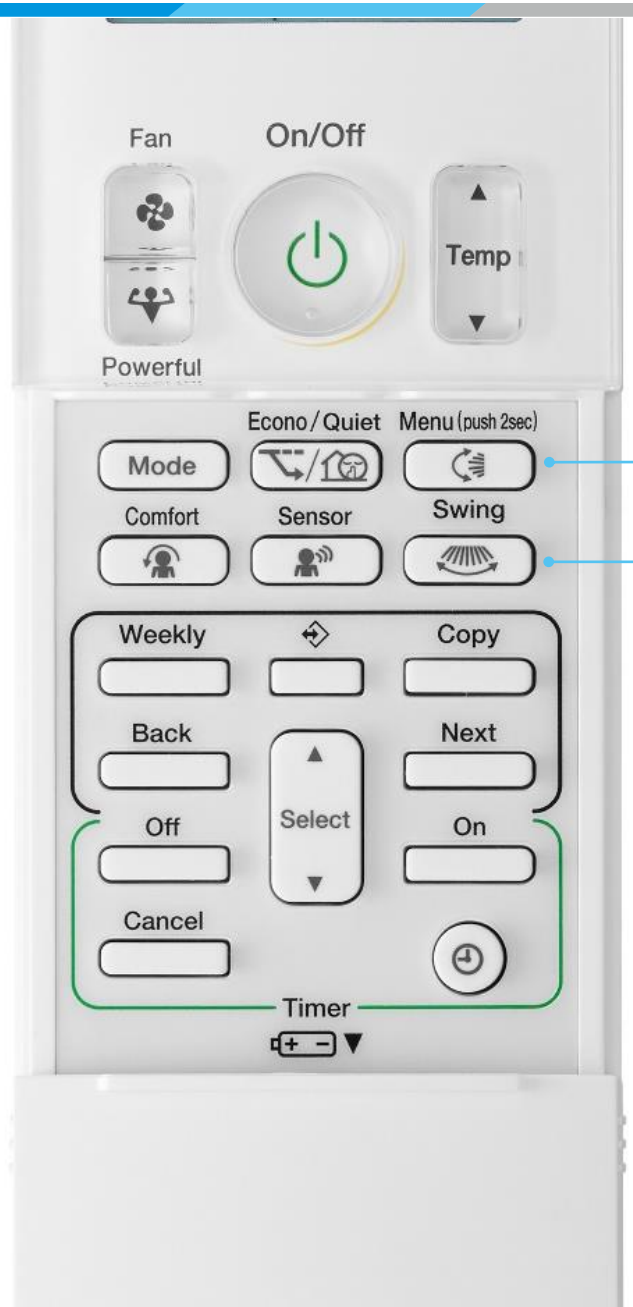

3-D AIRFLOW

- Reduces indoor temperature fluctuation
- Improves air circulation
- More uniform temperatures in the space

Toggle Horizontal Louvres

Toggle Vertical Louvres

Toggle for 3-D Airflow

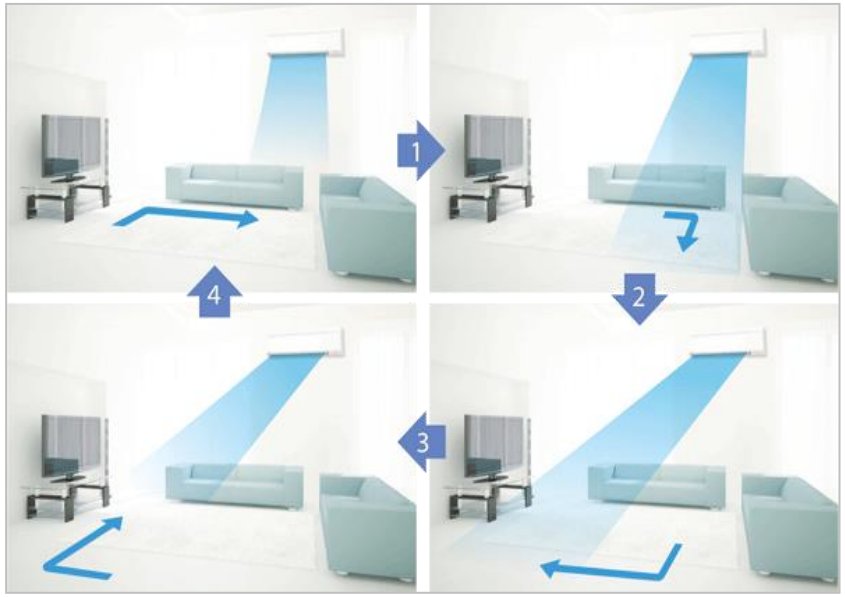

Wireless Controller Tour

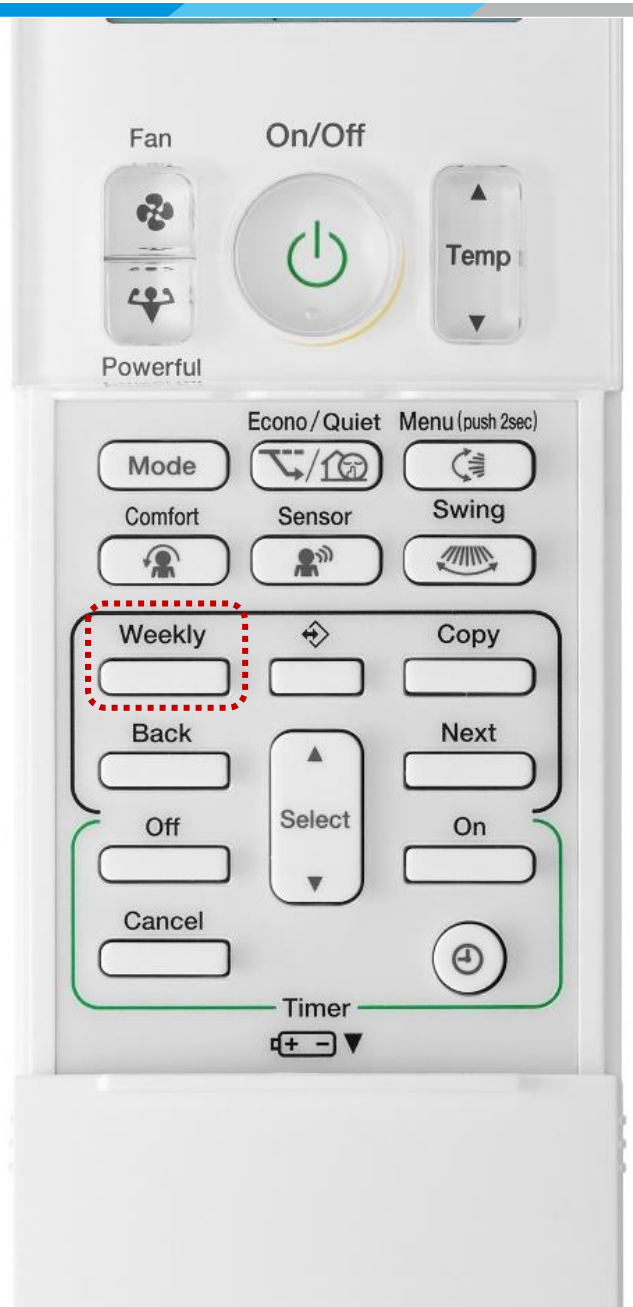

WEEKLY TIMER

- Program precise ON/OFF times for the week
- Up to 4 timer settings can be set for each day of the week

Day	Example Setting
Mon-Fri	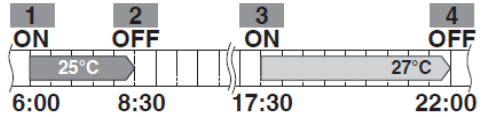
Sat-Sun	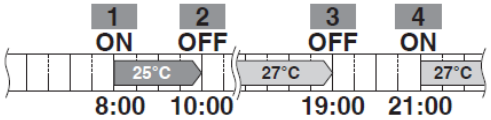

Wireless Controller Tour

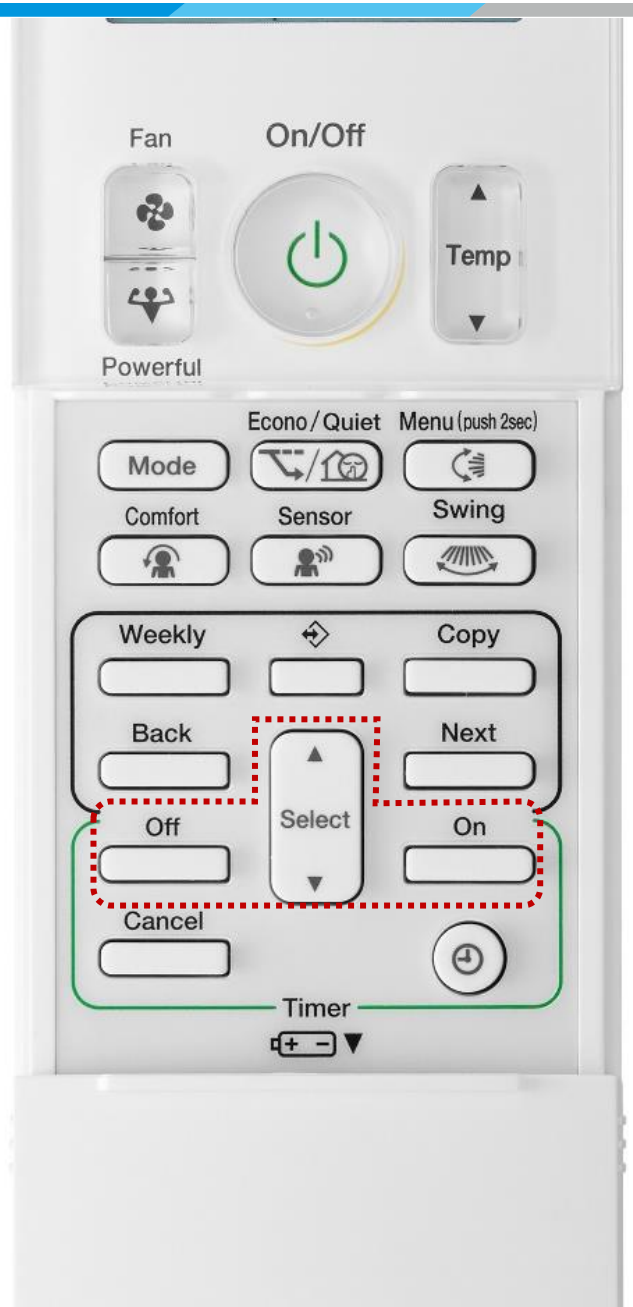

24 HOUR ON/OFF TIMER

- Pre-Set ON/OFF times within a 24-hour period

Example: turn OFF at 12pm & back ON at 2pm

NIGHT SET MODE

- Night Set Mode auto activates during OFF Timer
  - Prevents over-cooling/heating by shifting setpoint temperature after one hour until shutoff

Cooling Operation

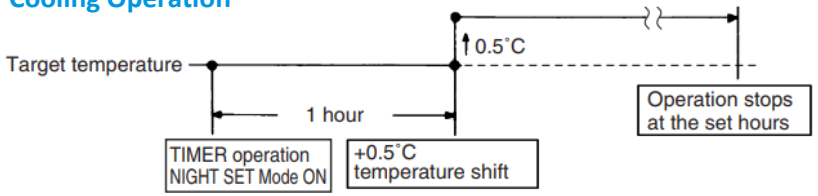

Heating Operation

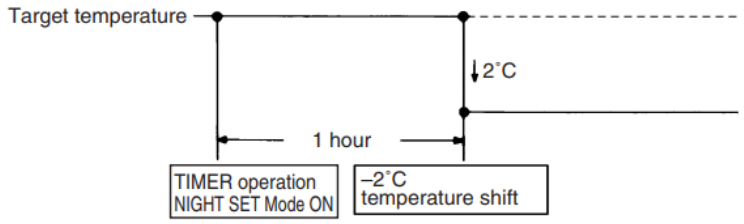

Built-in Wi-Fi Control

- WLAN module allows the XL series to be conveniently operated through your smartphone or tablet via the ‘Mobile Controller’ app
- XL Premium features a built-in Adaptor
- Compatible with **Android (≥ 4.0.3) & iOS (≥ 7.0) devices***

MOBILE CONTROLLER

GET IT ON Google Play

Download on the App Store

Function	XL Premium
Start/stop operation	✓
Set operation mode	✓
Set fan speed	✓
Set temperature operation	✓
Show room temperature	✓
Show outdoor temperature	✓
Error notification	✓
Password setting	✓
Set weekly schedule • Start/stop operation • Select operation mode • Set temperature Maximum 6 actions per day	✓

*Portrait orientation only

Mobile Controller Voice Assistant

- ‘Mobile Controller’ app is compatible with Google Assistant & Amazon Alexa, operations of the Daikin AC unit can be done via their voice control hub (Google Home, Amazon Echo etc.) and from their respective companion Android/iOS app
- Daikin AC is now part of the Google & Amazon home automation ecosystem along side lights, garage doors, security systems etc. that can be controlled via their hub/app

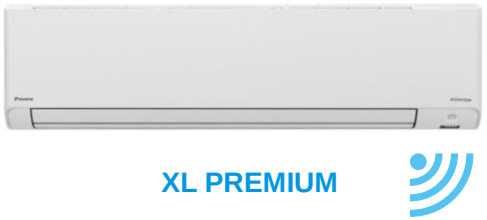

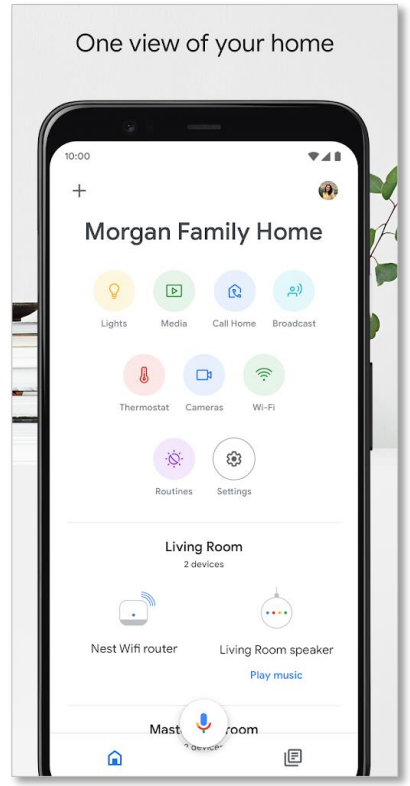

*Portrait orientation only

Connecting to S21 Accessories

- The S21 port on the FTX(K)M-WVMA indoor unit PCB has a non standard terminal block
- A ‘S21 Conversion Connector’, **KER087A41** is required when connecting S21 accessories such as a wired controller (BRC073A4) with the remote controller harness (BRCW901A03/08)
- KER087A41 can be installed within the electrical box

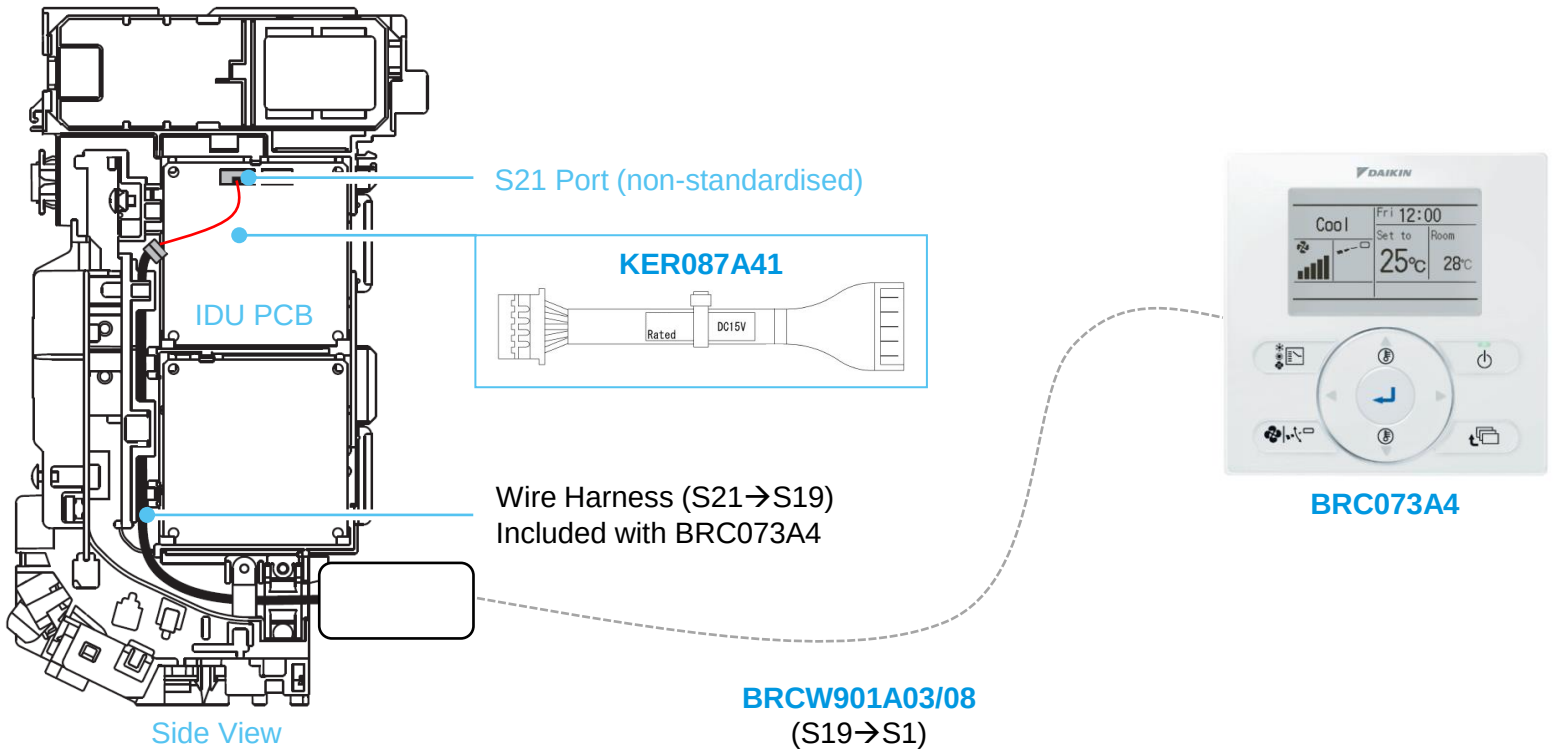

FEATURES & TECHNOLOGY

3 Layers of Filtration

Unique 3 step air purification.

1. PREFILTER
Captures larger particulates such as dust, bacteria and allergens to ensure unimpeded operation of other filters in the system.

2. ENZYME BLUE DEODORISING FILTER
Odours are absorbed by this filter keeping your air clean, fresh and odour free.

3. DAIKIN STREAMER TECHNOLOGY
Discharges high speed electrons generating powerful oxidative decomposition that continuously removes odours, bacteria* and indoor air pollutants such as formaldehyde.

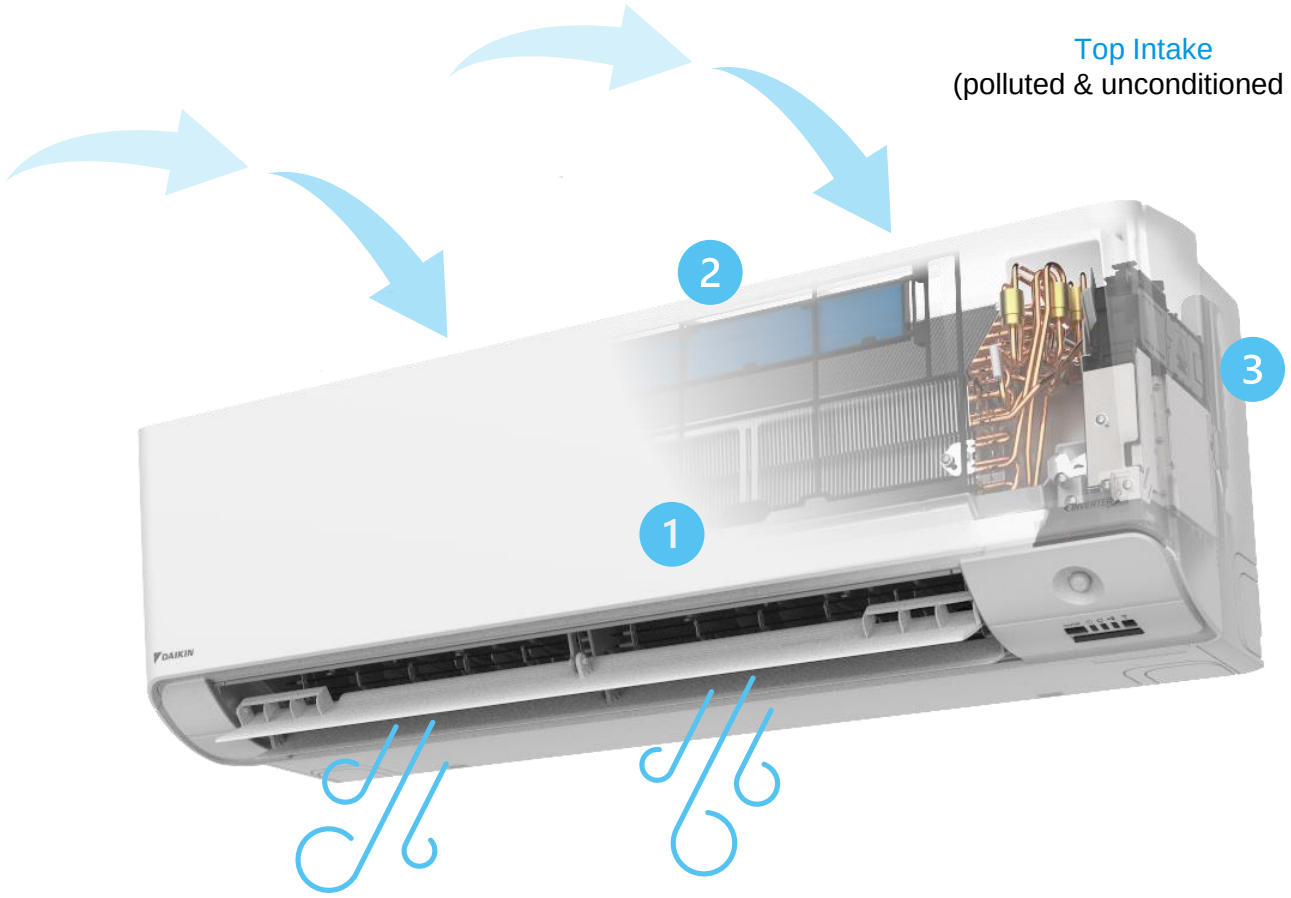

*Tested and verified by Tohoku Bunka Gakuen University & Kitasato Research Centre of Environmental Sciences.

Daikin Streamer Technology

- Our Streamer Technology is only available in Daikin products
- Features a type of plasma discharge that generates high-speed electrons
- These electrons combine with oxygen & nitrogen molecules generating powerful **Oxidative Decomposition** that continuously removes odours, bacteria and indoor air pollutants such as formaldehyde for superior air purification

How it Works?

STREAMER

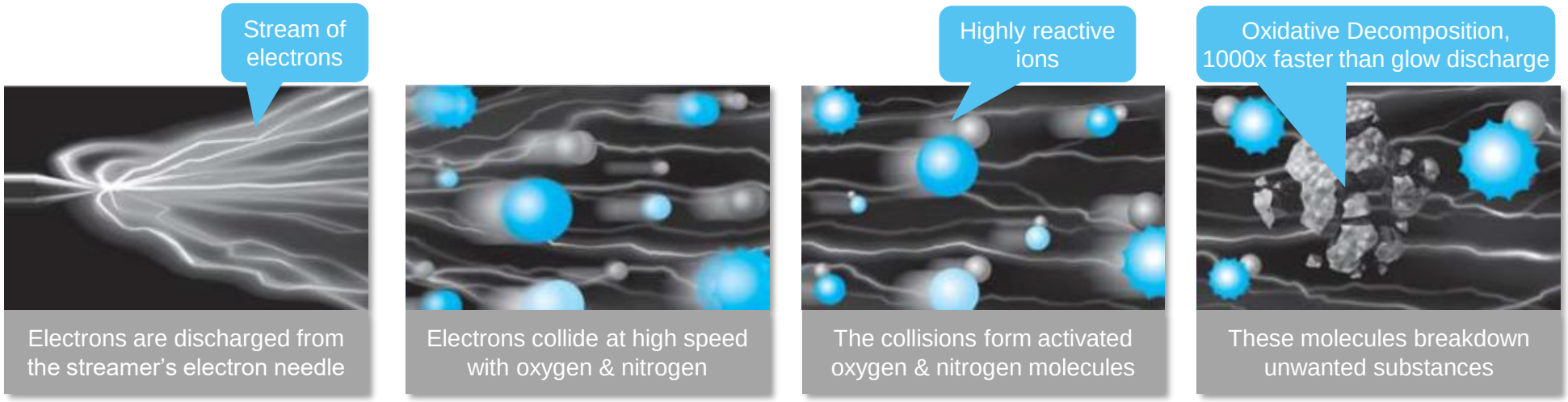

THE THREE C'S

CLASH
Decomposes harmful substances trapped by the High Efficiency Particulate Filter.

CYCLE
Maintains the Deodorising Filters deodorising capacity by assisting odour decomposition.

CLEAN
Removes bacteria from all filters, allowing them to be maintenance free and increasing filter longevity.

How Effective is Daikin Streamer Technology?

- Below are examples of Streamer Technology in action. Test Condition: Pollen, Mould & Allergens were placed on the Steamer's electrode and then photographed through an electron microscope after being exposed with the Streamer's plasma discharge.

Tested with 13 pollen based allergens including Cedar Pollen and Cypress Pollen.

Before Exposure

After 15min Exposure

Tested with 6 fungal allergens including Alternaria and Eurotium.

Before Exposure

After 15min Exposure

ELIMINATES POLLEN

More than 99.6%[1] in 2 hours

ELIMINATES MOULD

More than 99.9%[2] in 24 hours

ELIMINATES ALLERGENS

More than 99.61%[1] in 24 hours

[1] Verified at Wakayama Medical University with the following test condition: Irradiated allergens with Streamer & checked decomposition of allergen proteins by either the ELISA method, electrophoresis or electron microscopy.
[2] Verified at Japan Food Research Laboratories using antibacterial test/mould elimination test (test number: 204041635-001).

Indoor Unit Technology

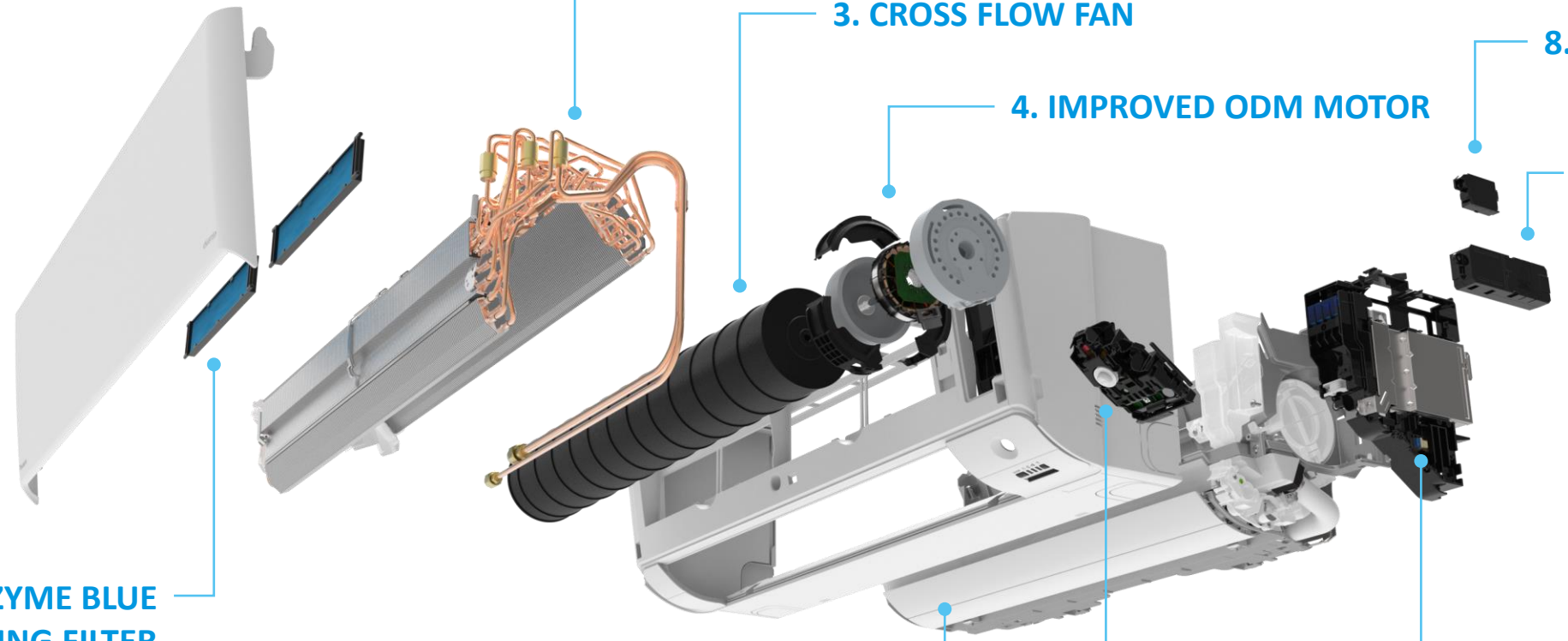

1. ENZYME BLUE DEODORISING FILTER

Features synthetic enzymes that decomposes odours & deactivates allergy causing bacteria

- Sensitive Choice approved
- All models features a 3-piece set*

Step 1	Step 2	Step 3
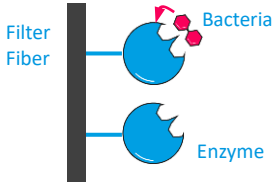		
Bacteria is adsorbed onto the surface of Enzyme Filter	Bacteria cell wall is hydrolysed by the enzymes (broken down)	Bacteria is inactivated with only simple by-products produced

*Replacement Filters are available for separate purchase, refer to Operation Manual for details

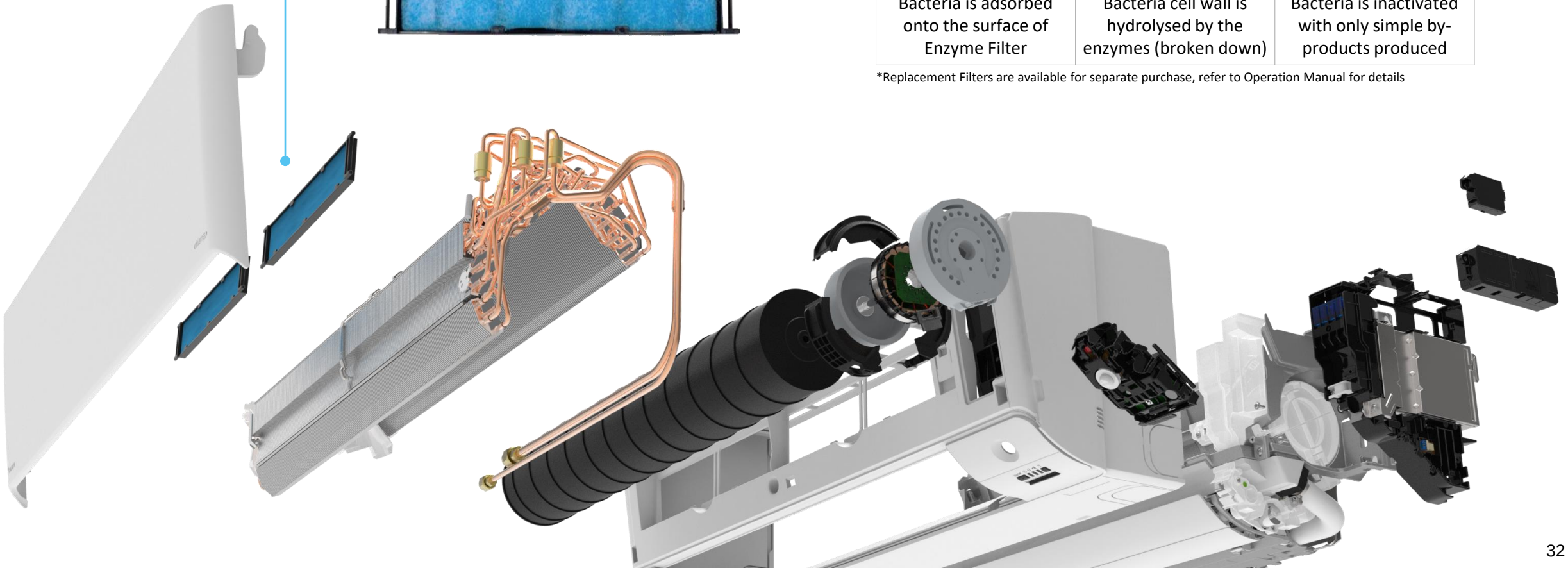

Indoor Unit Technology Tour

2. MULTI SLIT FIN HEAT EXCHANGER

3-row heat exchanger with multi slit fins

- Ø5mm copper pipes (2 rows x 18 stages & 1 row x 12 stages)
- Slits maximises surface area for greater heat exchange, COP & reduced airflow resistance
- Hydrophilic treated for corrosion resistance

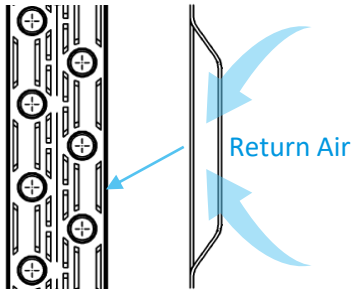

Heat Exchanger Fin with Slits

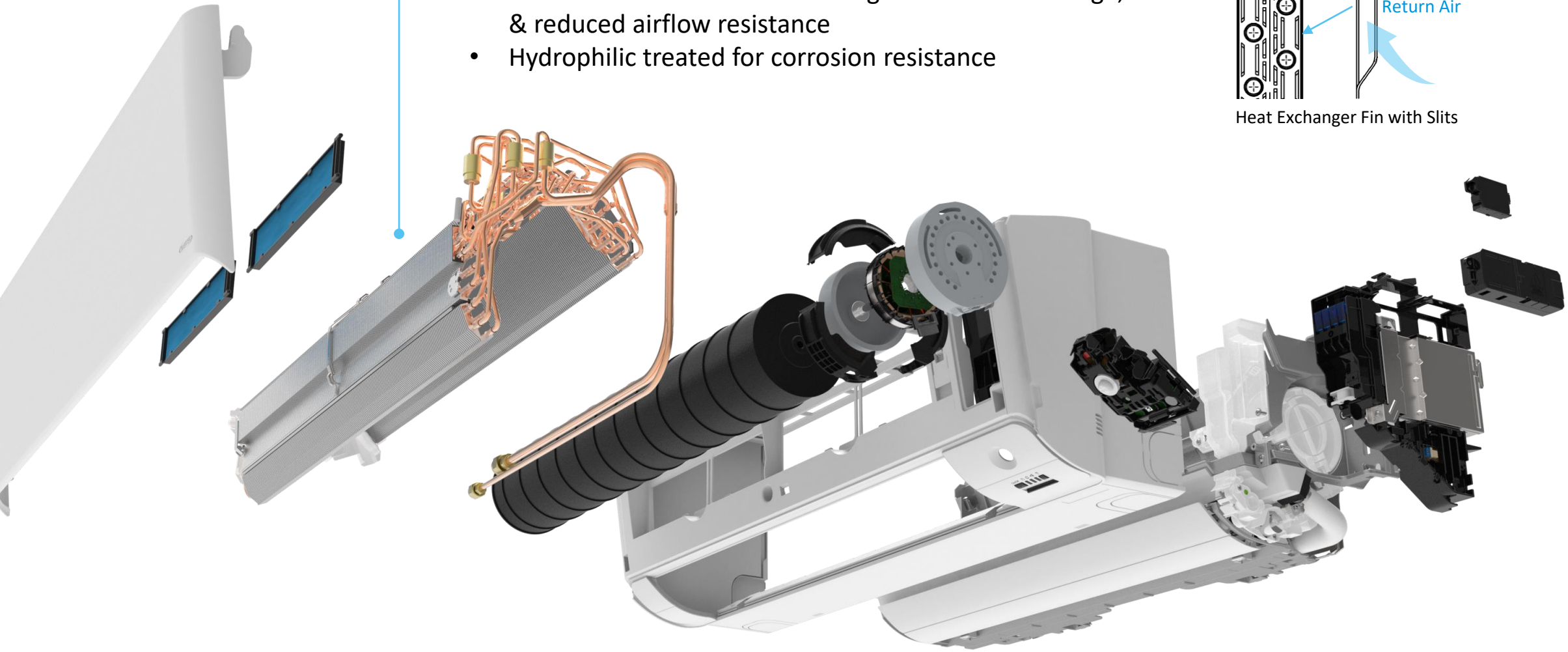

Indoor Unit Technology Tour

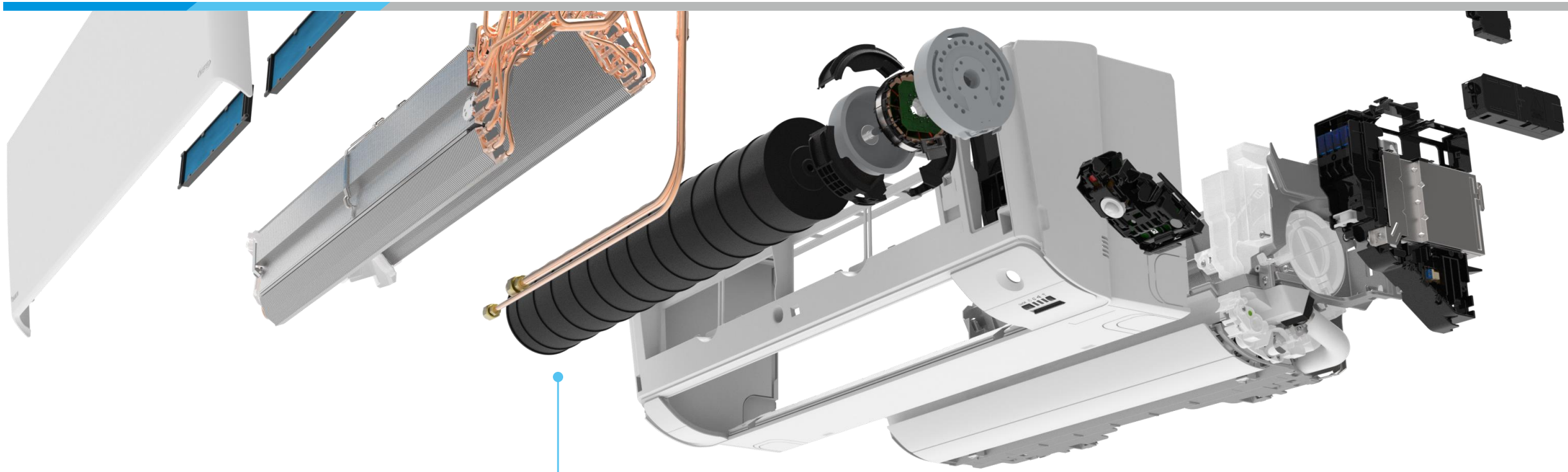

3. CROSS FLOW FAN

Large diameter rotor with aerofoil design

- Blade edges are optimised to reduce turbulence & minimise operating sound levels
- Large rotor allows for greater airflow delivery

Ø115 → **118mm**

Direction of Rotation

4. IMPROVED ODM MOTOR

- 10 → 14 pole DC outer diameter rotor motor for improved torque delivery
- Encased with rubber vibration dampeners
- 5 Step Fan Speed, Quiet & Auto

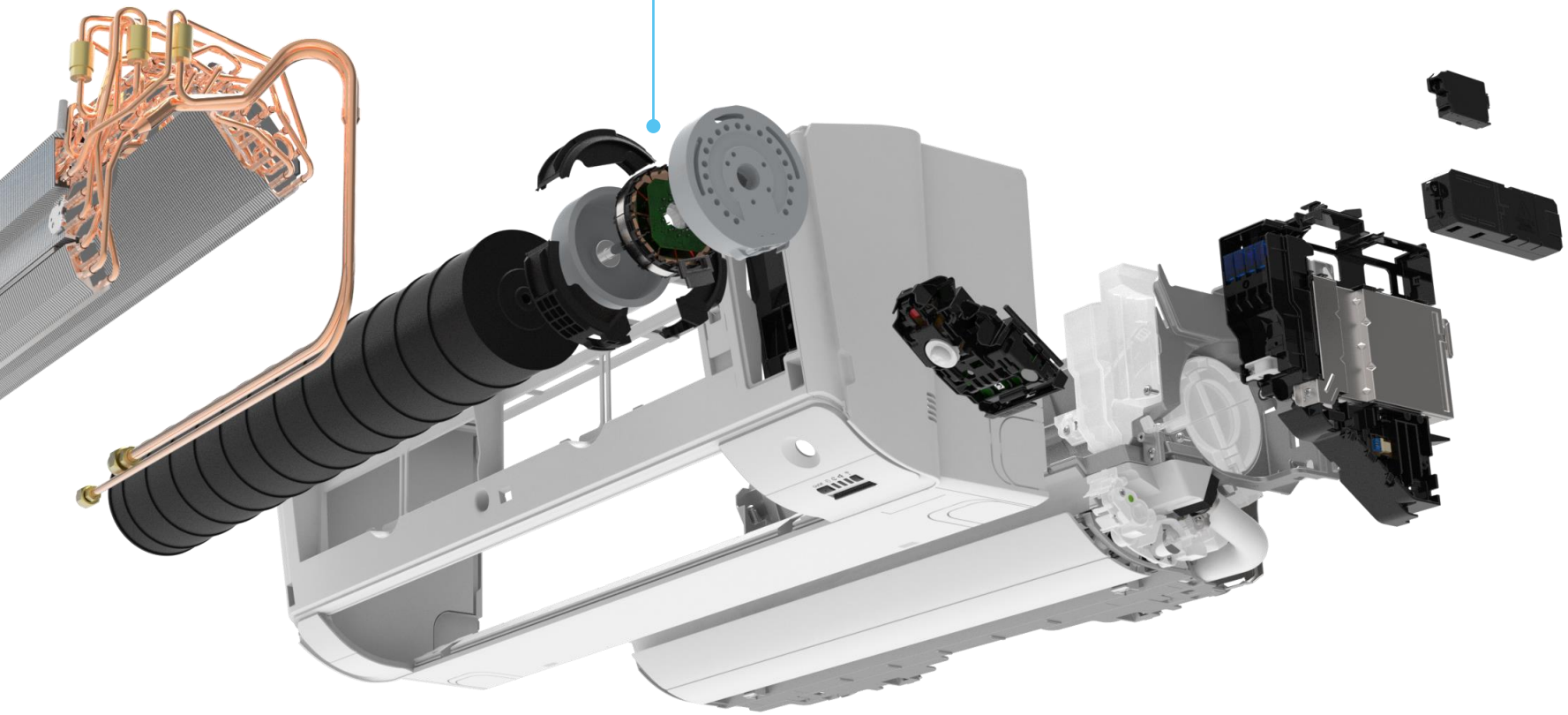

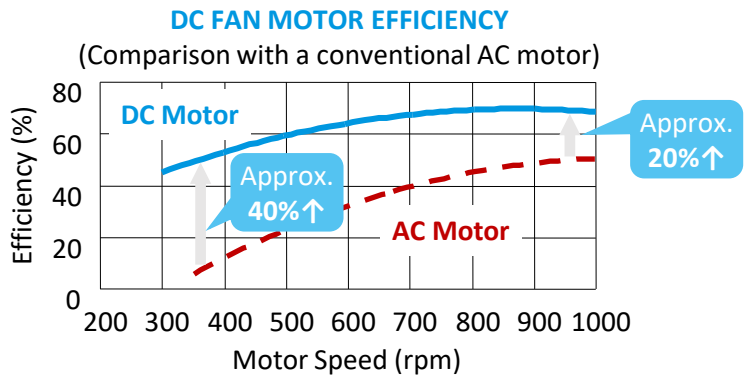

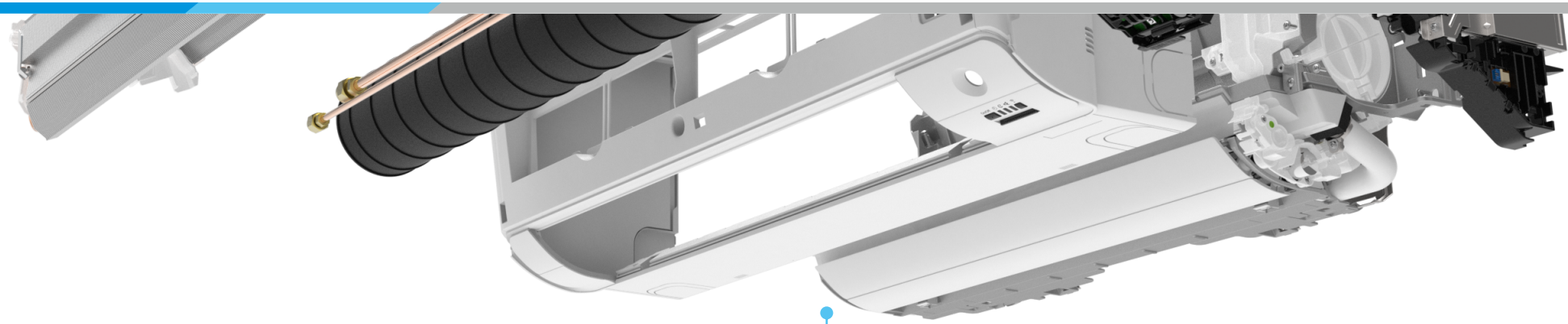

5. REDESIGNED DUAL FLAPS

All models feature new power-airflow dual flaps

- Resigned main discharge louvre with aerodynamic end vanes
- Reduced turbulence & longer throw distances
- Enables large air volumes at low velocities for draught free comfort (Comfort Mode operation)

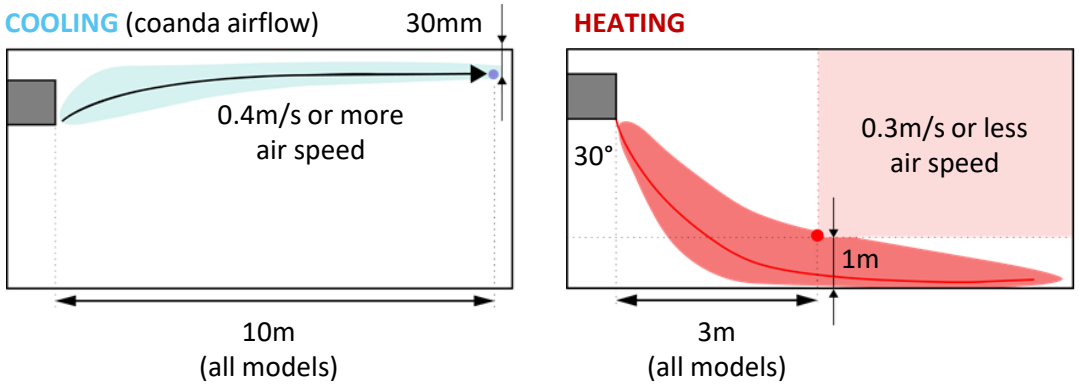

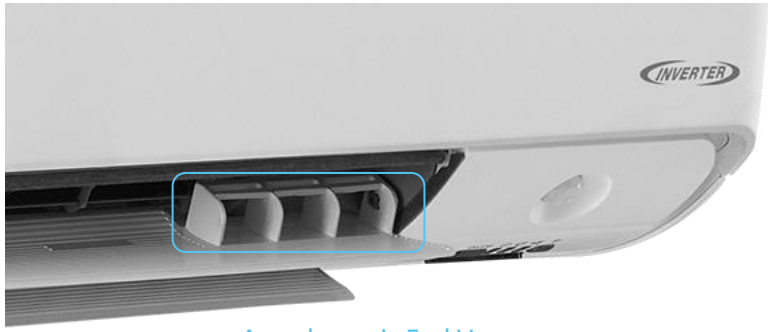

Aerodynamic End Vanes

Indoor Unit Technology Tour

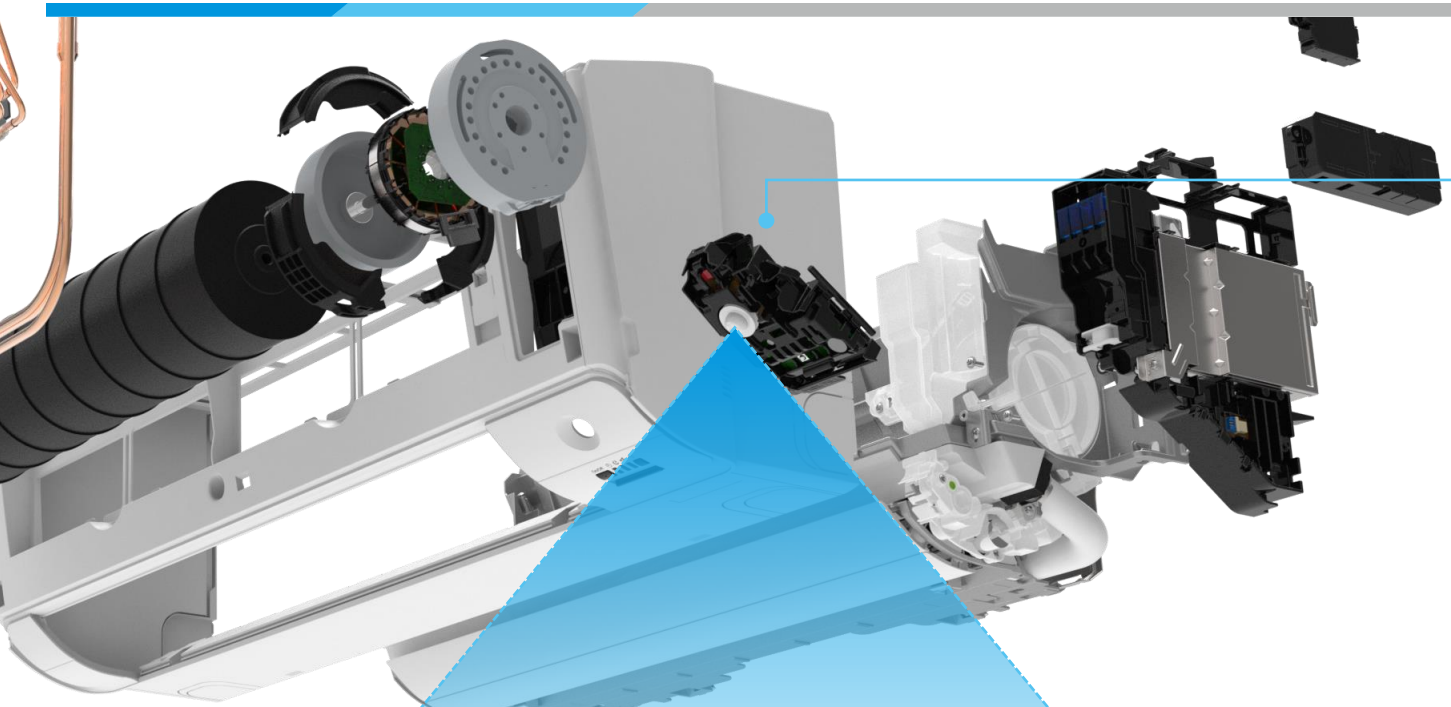

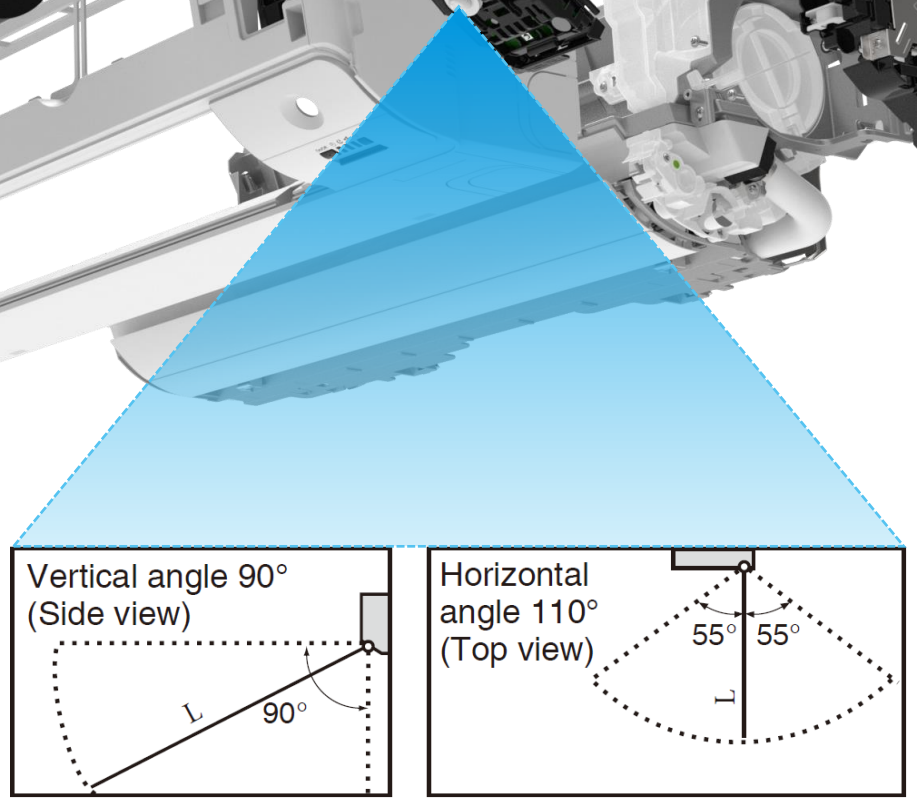

L= 7m

6. INTELLIGENT EYE

Enables energy saving operation by adjusting set temperature (±2°C) when no occupants detected

Indoor Unit Technology Tour

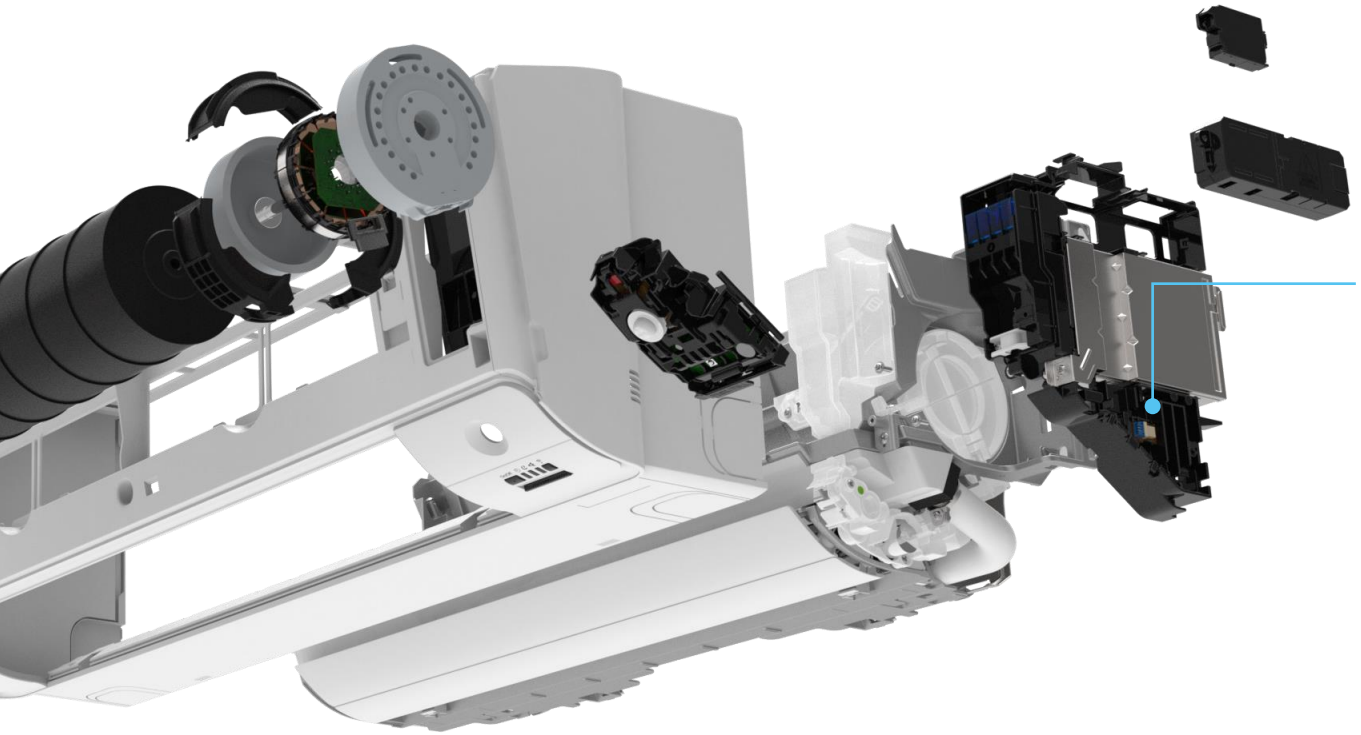

7. HUMIDITY SENSOR

Features a built-in humidity sensor for improved Program Dry Function operation.

1. Humidity is monitored
2. SA temp. can be accurately controlled to effectively remove moisture (dehumidify)
3. Capacity loss is minimised as much as possible

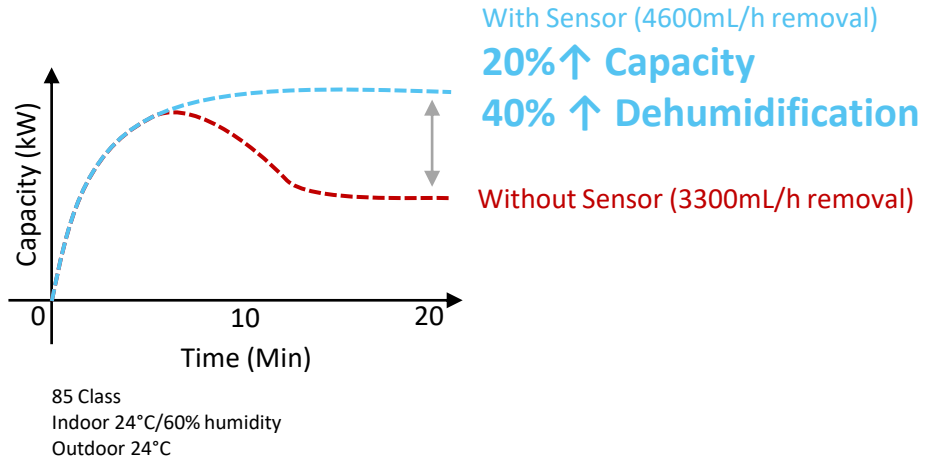

85 Class
Indoor 24°C/60% humidity
Outdoor 24°C

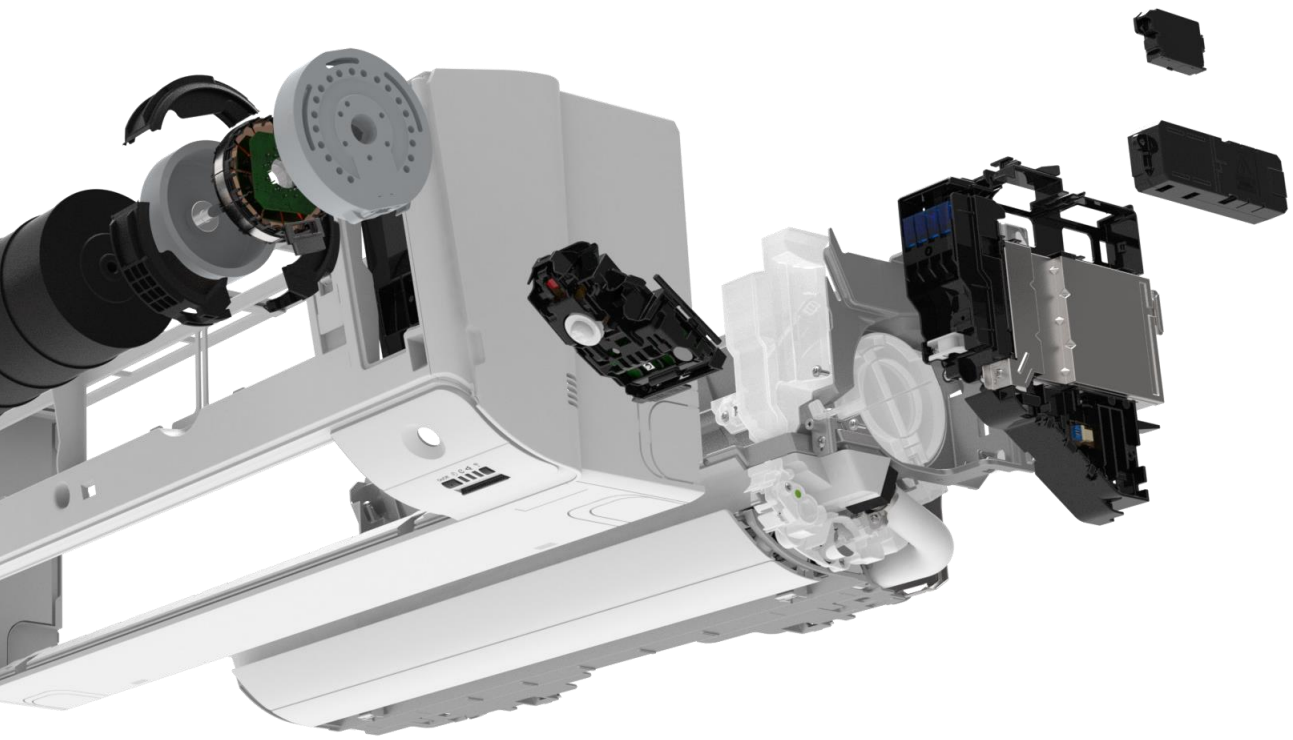

8. BUILT-IN WI-FI

Provides Daikin Mobile Controller app compatibility straight out of the box.

- Wi-Fi standard: IEEE802.11 b/g/n @ 2.4GHz only
- AP channel: 1-13
- Data transmission security (server): SHA-256

MOBILE CONTROLLER

Indoor Unit Technology Tour

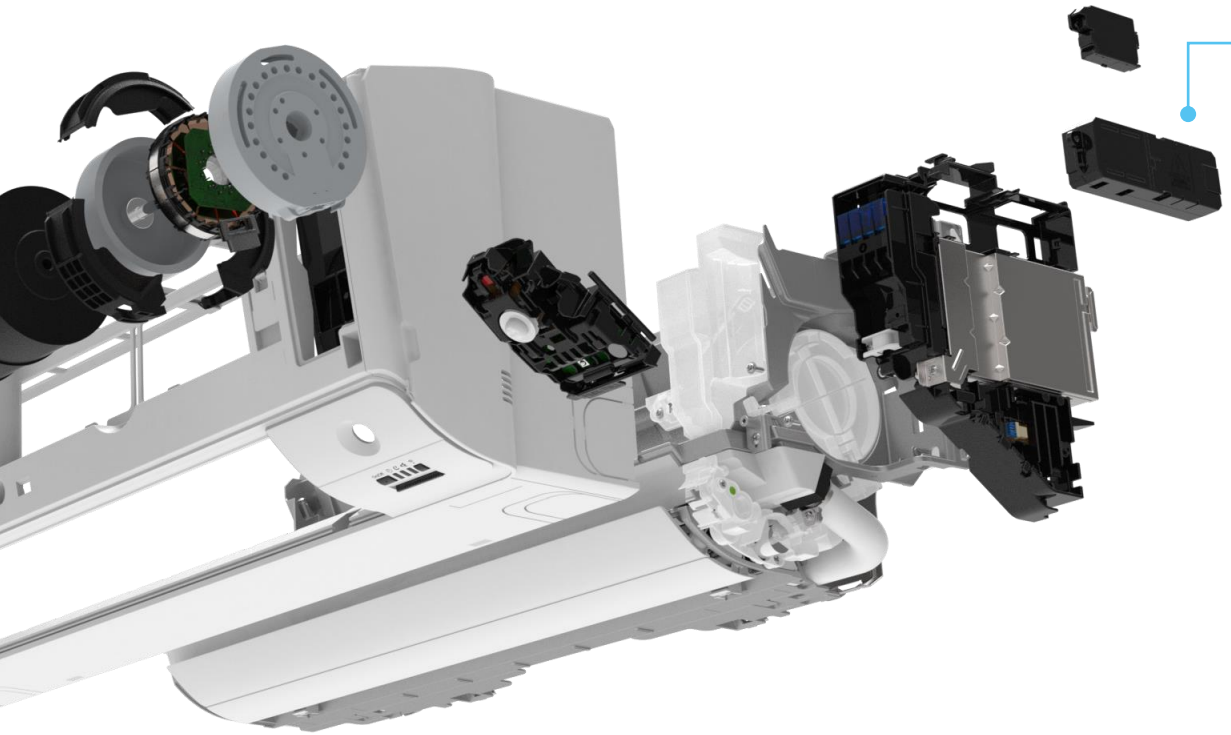

9. STREAMER TECHNOLOGY

- Releases high speed electrons that collide with oxygen & nitrogen molecules, thus activating them and enabling oxidative decomposition
- Removes odours, bacteria and indoor air pollutants such as formaldehyde

STREAMER

ELIMINATES POLLEN >99.6% in 2 hours

ELIMINATES MOULD >99.9% in 24 hours

ELIMINATES ALLERGENS >99.61% in 24 hours

Refrigerant Technology

R32 refrigerant has zero ozone depletion potential and substantially lower 'Global Warming Potential Factor' than R410A, providing less risk of harm to the environment

GLOBAL WARMING POTENTIAL

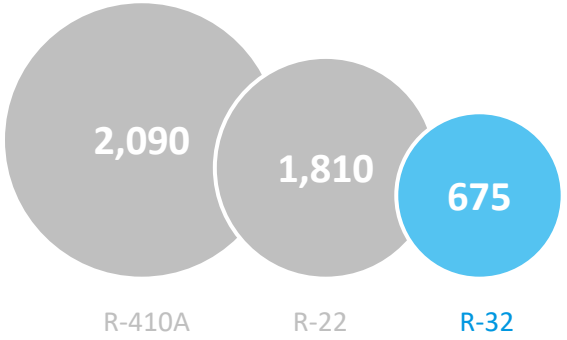

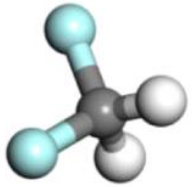

GWP IMPACT OF R32

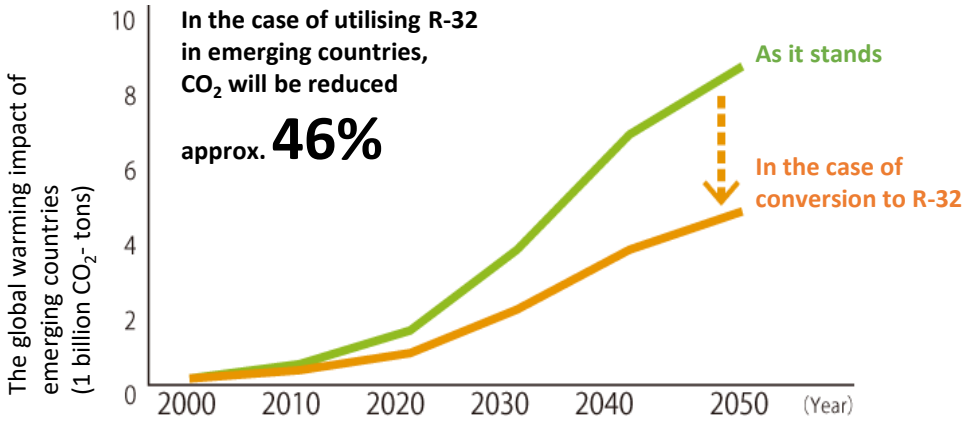

Notes:
- Global Warming Potential (GWP) is a relative measure of how much heat a greenhouse gas traps in the atmosphere.
- Global Warming Potential values are based on the Fourth Assessment Report from the Intergovernmental Panel on Climate Change (IPCC).

Source information:
"The large contribution of projected HFC emissions to future climate forcing"
Daikin estimated according to [Supporting Information of Guus J. M. Velders et al.]

Outdoor Unit Technology

INVERTER CONTROL

- Inverter control modulates the system capacity in response to load
- Delivers stable temperature whilst keeping power consumption down
- Non-inverter systems cause large temperature fluctuations through repeated switching (ON/OFF)

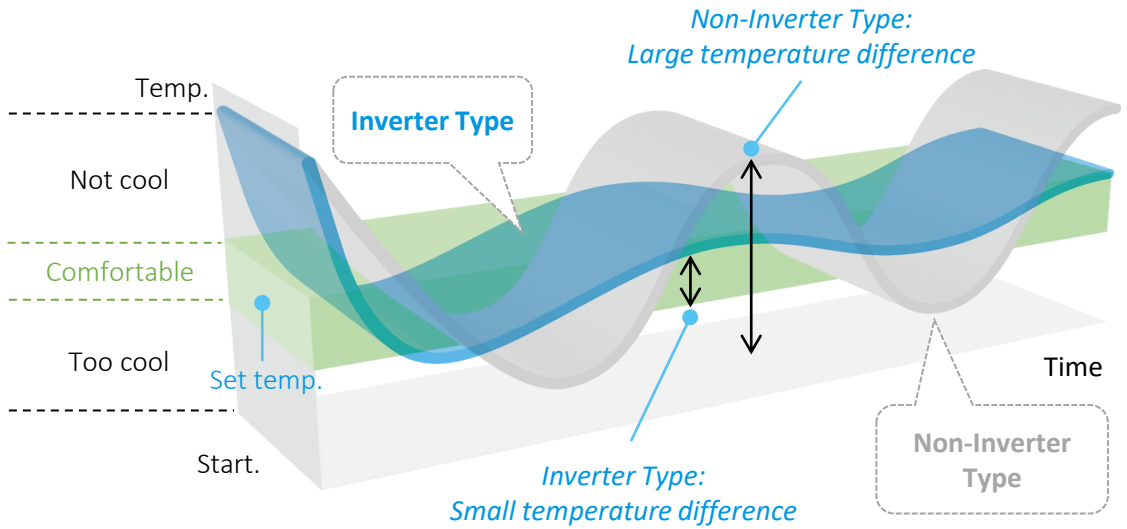

Time	Operation
Start Up	Inverter ramps up to deliver maximum capacity to achieve set temp. rapidly
Set Point	Inverter adjusts capacity output in response to outdoor temp. & indoor load

SAW EDGE FAN

- Large diameter (510mm) with Saw Tooth trailing edge
- Turbulence is reduced, resulting in both energy savings and quieter operation

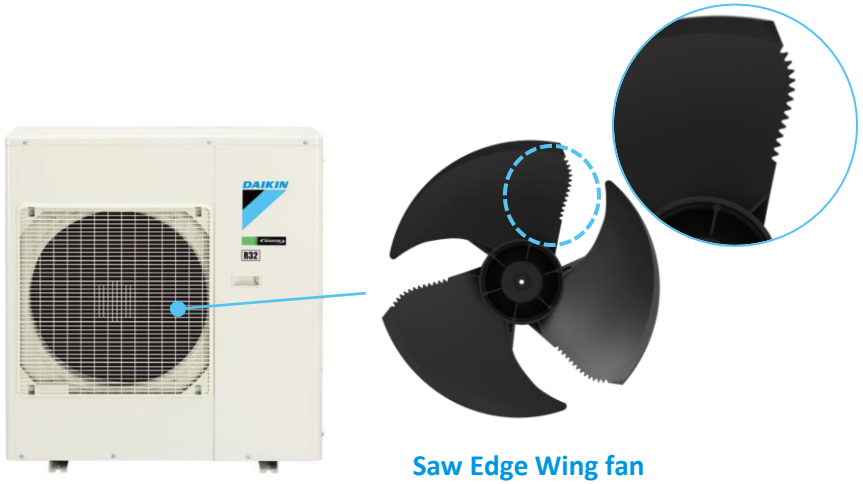

Outdoor Unit Technology

RELUCTANCE DC COMPRESSOR MOTOR

- Higher efficiencies with 2 different torques
  - Magnetic torque of Neodymium magnet
  - Reluctance torque
- Lower energy consumption especially at lower operation frequencies

SWING COMPRESSOR

- Large Energy Savings – smooth rotation with low friction & refrigerant gas compression
- Low Vibration & Noise – smooth piston motion works as if sliding along a ‘groove’
- High Durability – fewer moving parts in contact during operation increases reliability

Outdoor Unit Technology

DEMAND RESPONSE “DRED”

- DRED is an acronym for Demand Response Enabling Device
- Designed to enable Electricity providers to reduce peak demand when necessary
- XL Premium models feature **Built-In** demand adaptors

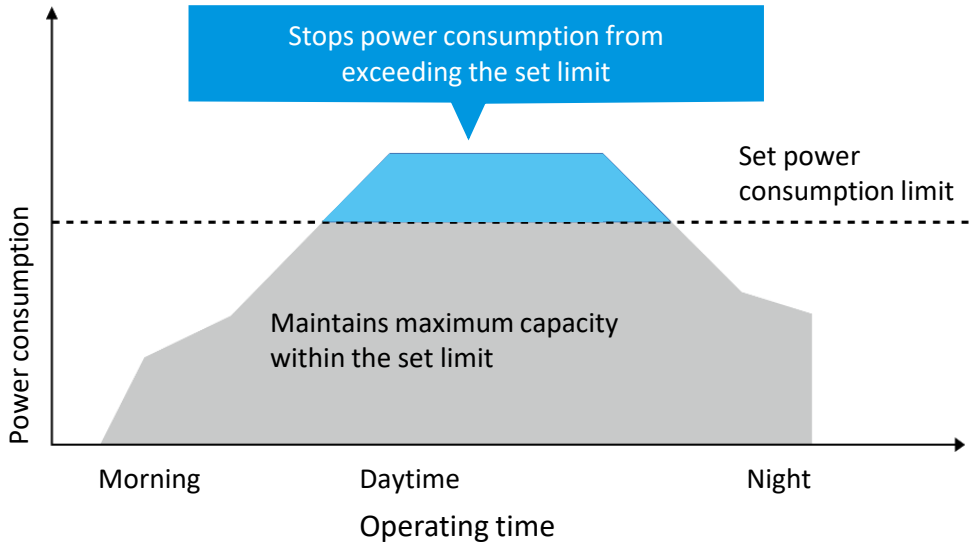

Modes	Limit	Details
DRM1	0%	Compressor Off
DRM2	40%	Limited to 40%
DRM3	60%, 70%, 80%, 90%	Dip Switch Settings

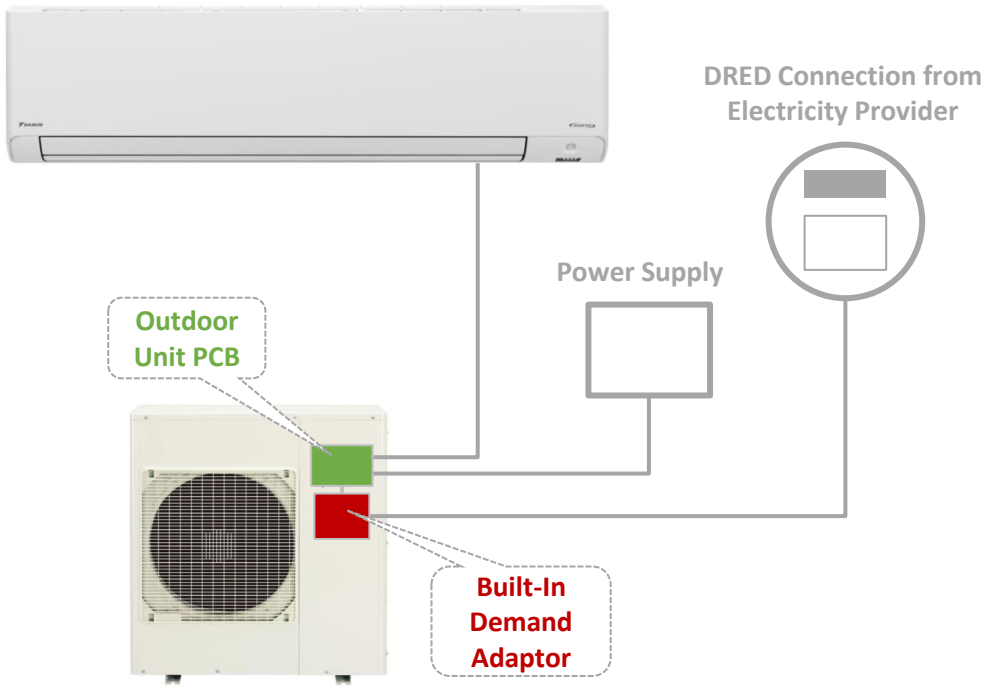

FEATURES CHECKLIST & SPECIFICATIONS

Feature Overview

Category	Features	FTXM-WVMA	FTKM-WVMA
Comfortable Airflow	Power-Airflow Dual Flaps NEW	✓	✓
	Power-Airflow Flap	×	×
	Wide-Angle Louvers	✓	✓
	3-D Airflow (up/down & left/right)	✓	✓
	Comfort Airflow Mode	✓	✓
Comfort Control	Indoor Unit Quiet Operation	✓	✓
	Outdoor Unit Quiet Operation	✓	✓
	2-Area Intelligent Eye	×	×
	Intelligent Eye	✓	✓
	Hot-Start Function	✓	×
	Program Dry Function	✓	✓
	Auto Fan Speed	✓	✓
	0.5°C increment temperature control NEW	✓	✓
Lifestyle Convenience	Econo Mode	✓	✓
	Inverter Powerful Operation	✓	✓
	Wireless Remote Controller with Backlight	✓	✓
	Built-In Wireless LAN Adaptor NEW	✓	✓
	Indoor Unit On/Off Switch	✓	✓
Health & Cleanliness	Streamer Technology NEW	✓	✓
	Enzyme Blue Deodorising Air-Purifying Filter	✓	✓
	Mould Proof Operation NEW	✓	✓
	Optional Dust Collection Filter	✓	✓
	Mould-Proof Air Filter (Pre-Filter)	✓	✓
Timers	Count Up-Down On/Off Timer	✓	✓
	24 Hour On/Off Timer	✓	✓
	Weekly Timer	✓	✓
	Night Set Mode	✓	✓
Worry Free	Auto-Restart after Power Failure	✓	✓
	Self-Diagnosis with Digital Display	✓	✓

Specifications

Indoor Unit		FTXM85WVMA	FTXM95WVMA
Outdoor Unit		RXM85WVMA	RXM95WVMA
Rated Capacity	Cool (kW)	8.5	9.5
	Heat (kW)	9.0	10.3
Capacity Range	Cool (kW)	2.0-10.5	2.0-11.2
	Heat (kW)	1.9-11.6	1.9-12.0
Indoor Airflow Rate (H)	Cool (l/s)	380	410
	Heat (l/s)	403	425
Indoor Fan Speeds		5 steps, quiet and automatic	
Star Rating (Hot/Avg/Cold)	Cool	3.5/3.0/3.5	3.5/3.0/3.0
ZERL (Residential)	Heat	2.5/2.0/2.0	2.5/2.0/1.5
Front Panel Colour		White	
Power Supply		1 phase, 220-240V, 50Hz	
Power Input (Rated)	Cool (kW)	2.35	2.8
	Heat (kW)	2.66	3.1
E.E.R/C.O.P	Cool/Heat	3.62/3.38	3.39/3.32
TCSPF (Residential)	Hot/Avg/Cold	5.28/4.91/5.15	5.01/4.69/4.94
HSPF (Residential)	Hot/Avg/Cold	4.47/3.93/3.50	4.26/3.74/3.24
A.E.E.R/A.C.O.P	Cool/Heat	3.59/3.36	3.37/3.31
Dimensions (HxWxD)	Indoor (mm)	329x1240x278	
	Outdoor (mm)	990x940x320	
Weight	Indoor (kg)	19	19
	Outdoor (kg)	77	77
Compressor Type		Hermetically Sealed Swing Type	
Refrigerant Type		R32	
Max Pipe Length	(m)	30	30
Max Level Difference	(m)	20	20
Pipe Sizes	Liquid (mm)	6.4	6.4
	Gas (mm)	15.9	15.9
Outdoor Operating Range	Cool (°CDB)	-10 to 46	
	Heat (°CWB)	-15 to 18	
Indoor Sound Level (H/SL)	Cool (dBA)	49/35	51/36
	Heat (dBA)	49/33	51/33
Outdoor Sound Level (H/SL)	Cool (dBA)	54/51	54/51
	Heat (dBA)	55/51	55/51
Outdoor EPA Sound Power Level (H)	Cool (dBA)	66	66
	Heat (dBA)	67	67

Specifications

Indoor Unit		FTKM85WVMA	FTKM95WVMA
Outdoor Unit		RKM85WVMA	RKM95WVMA
Rated Capacity	Cool (kW)	8.5	9.5
Capacity Range	Cool (kW)	2.0-10.5	2.0-11.2
Indoor Airflow Rate (H)	Cool (l/s)	380	410
Indoor Fan Speeds		5 steps, quiet and automatic	
Star Rating (Hot/Avg/Cold) ZERL (Residential)	Cool	3.5/3.0/3.5	3.5/3.0/3.0
Front Panel Colour		White	
Power Supply		1 phase, 220-240V, 50Hz	
Power Input (Rated)	Cool (kW)	2.35	2.80
E.E.R	Cool	3.62	3.39
TCSPF (Residential)	Hot/Avg/Cold	5.28/4.91/5.15	5.01/4.69/4.94
A.E.E.R	Cool	3.59	3.37
Dimensions (HxWxD)	Indoor (mm)	329x1240x278	
	Outdoor (mm)	990x940x320	
Weight	Indoor (kg)	19	19
	Outdoor (kg)	77	77
Compressor Type		Hermetically Sealed Swing Type	
Refrigerant Type		R32	
Max Pipe Length	(m)	30	30
Max Level Difference	(m)	20	20
Pipe Sizes	Liquid (mm)	6.4	6.4
	Gas (mm)	15.9	15.9
Outdoor Operating Range	Cool (°CDB)	-10 to 46	
Indoor Sound Level (H/SL)	Cool (dBA)	49/35	51/36
Outdoor Sound Level (H/SL)	Cool (dBA)	54/51	54/51
Outdoor EPA Sound Power Level (H)	Cool (dBA)	66	66

THANK YOU.

Any questions?